WELDING RESEARCH

SUPPLEMENT TO THE *WELDING JOURNAL*, AUGUST 2005
Sponsored by the American Welding Society and the Welding Research Council

Determination of Optimal Welding Conditions with a Controlled Random Search Procedure

A controlled random search procedure can determine the near-optimal settings of welding process parameters within a large search space with a relatively small number of experiments

BY D. KIM, M. KANG, AND S. RHEE

ABSTRACT. This study proposes a method for determining the near-optimal settings of welding process parameters using a controlled random search (CRS) wherein the near-optimal settings of the welding process parameters are determined through experiments. The method suggested in this study is used to determine the welding process parameters by which the desired weld bead geometry is formed in gas metal arc (GMA) welding. In this method, the output variables (front bead height, back bead width, and penetration) are determined by the input variables (wire feed rate, welding voltage, and welding speed). The number of levels for each input variable and the total search points were determined to be 10 and 1000, respectively.

Introduction

Bead geometry in the arc welding process is an important factor in determining the mechanical characteristics of the weld. Bead geometry variables, such as bead width, bead height, and penetration depth, are greatly influenced by welding process parameters including welding current, welding voltage, shielding gas, and contact tube-to-work distance (CTWD). The selection of the appropriate welding process parameters is required in order to obtain the desired weld bead geometry, which greatly influences weld quality. However, costly and time-consuming experiments are required in order to determine the optimum welding process parameters due to the complex and nonlinear nature of the welding process. Therefore, a more efficient method is needed to determine the optimum welding parameters.

The general procedure that could be used to determine the optimum weld parameters is response surface methodology (RSM). Response surface methodology is a group of statistical and mathematical techniques useful in modeling, improving, and optimizing processes. The general procedure of RSM for process optimization is as follows (Ref. 1):

1) Conduct screening experiments.

2) Move the experimental region near the optimal point. The best condition from this step is called "the near-optimal condition."

3) Develop a model within a relatively small region around the optimal point.

4) Determine the optimal settings for process parameters that maximize or minimize the objective function.

Many studies have been conducted on screening experiments, modeling, and optimization of welding processes (Refs. 2–12). Several studies have employed regression analysis in order to induce a linear model between the welding process parameters and weld bead geometry parameters (Refs. 3–5). Other studies have used neural networks to develop nonlinear models of the welding process (Refs. 6–8), while other studies (Refs. 9, 10) have used the Taguchi method to find robust welding conditions. All of these techniques can be used effectively when the application process is near the optimum conditions or over a stable operating region in which an arc can be struck and melt-through does not occur (Ref. 13). Hence, preliminary experiments to help move the experimental region near the optimal point and provide a stable operating region must be performed in order to apply regression modeling, neural network modeling, and the Taguchi method to the arc welding process. There are several ways for determining the near-optimal welding conditions:

Determination of the near-optimal welding conditions through a simple experiment is possible based upon a full factorial experiment without inducing a model for the welding process. Nevertheless, the number of experiments necessary exponentially increases as the number and level of input variables increase. It is thus impractical to apply the method in the initial stages of determining the welding process parameters. The method of steepest assent based upon derivatives (Ref. 14) can lose the direction of the search when melt-through or other nonlinear phenomena appear within the search range of the welding process parameters.

The genetic algorithm, which is a global algorithm, can overcome the problems associated with full factorial experi-

D. KIM is with Joining & Coating Technology, Shipbuilding & Plant R & D Institute, Samsung Heavy Industries Co., Geoje-si, Korea. M. KANG is with Advanced Welding & Joining Research Team, KITECH Incheon, Korea. S. RHEE is with the Department of Mechanical Engineering, Hanyang University, Seoul, Korea.

KEYWORDS

Arc Welding
Controlled Random Search
Optimization
Weld Bead Geometry
Weld Quality
Welding Process Parameter

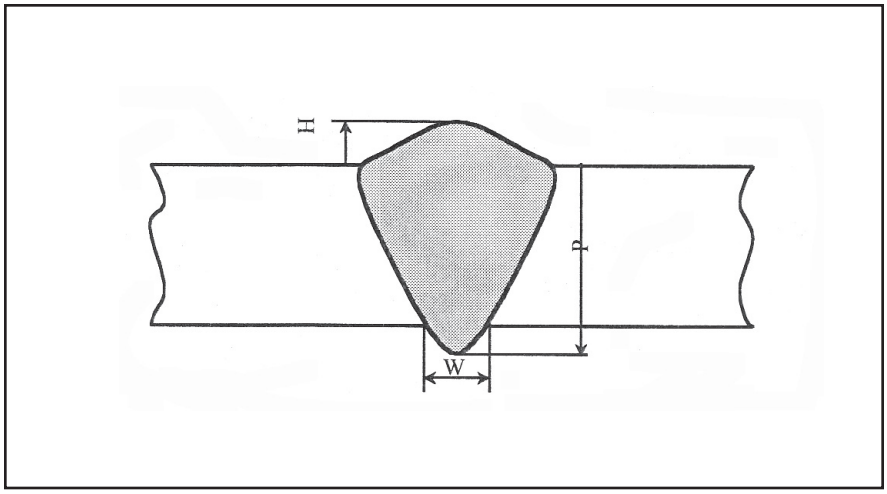

Fig. 1 — Weld bead geometry.

Table — 1 Search Range for Welding Parameters and Number of Levels

Parameter	Range	Number of levels
Wire feed rate	11.3–23.0 (cm/s)	10
Welding voltage	18–27 (V)	10
Welding speed	2–22 (mm/s)	10

ments and the method of steepest assent. The objective function to be optimized does not need to be differentiable with the genetic algorithm, and it can easily be applied to complex systems including the welding process. The genetic algorithm, in addition, can perform the search without being affected by welding phenomena such as melt-through (Refs. 15, 16). The performance of the genetic algorithm is affected by controller parameters such as the number of individuals, crossover rate, and mutation rate (Refs. 17, 18). Subramaniam et al. (Ref. 13) used D-optimal experimental design combined with fractional factorial screening experiments to select process parameters in pulsed GMAW. However, a point of criticism of the D-optimal experimental design is that it is frequently quite sensitive to the form of the model (Ref. 19).

In this study, the method used to select the welding process parameters to obtain the desired weld bead geometry in GMA welding is CRS (controlled random search). The CRS algorithm is a global optimization algorithm that is similar to the genetic algorithm. In addition, the computer implementation of CRS algorithms is much easier than it is for the genetic algorithm. With CRS, the weld bead geometry variables are affected by wire feed rate, welding voltage, welding speed, shielding gas composition, electrode diameter, electrode extension, and electrode polarity (Ref. 2). Due to the large number of welding process parameters that affect bead geometry in CRS, three of the most important input variables — wire feed rate, welding voltage, and welding speed — were selected in this study to control the formation of the weld bead geometry.

Controlled Random Search

Controlled random search is suggested by Price (Ref. 20). It is a global optimization algorithm similar to the genetic algorithm, which has an advantage of a relatively lower possibility of converging to a local minimum point than the optimization algorithms based upon general gradient. The characteristics of the CRS are as follows (Ref. 20): 1) Controlled random search performs the search based upon a set of initial search points similar to the genetic algorithm, which is in contrast with the standard optimization method. Controlled random search, however, generates only one search point from the next iteration, while the genetic algorithm generates the same number of search points in the next iteration. 2) The objective function does not have to be continuous or differentiable since CRS only uses the objective function of each input variable. 3) The search is performed while eliminating the maximal or minimal value of the points comprising the initial search points when conducting a search on maximization or minimization problems. 4) The search can be performed within processes wherein the objective function value is quantitative or qualitative when an order can be established since the search is conducted according to the order of the objective function values. 5) While many optimization methods use the deterministic transition rule, the CRS algorithm instead uses the stochastic transition rule.

The process of finding a minimal point using CRS is as follows:

Controlled random search randomly generates a preset N number of search points called the candidate solutions within the search region of V, and consequently begins the search. The objective function of each search point is obtained, and the location information of each search point and the objective function value are stored in array A. A new search point P is then selected based upon the set of candidate solutions in each of the next iterations. The objective function value of point P is calculated when the search point P exists within the search range V. The objective function value calculated at point P (f_P) is compared with the objective function value at point M (f_M) as the maximum objective function value of the N number of points stored in array A. If $f_P < f_M$, then point M is eliminated from the set of candidate solutions and point P is included into the set. However, if $f_P > f_M$, point P is discarded and a new search point is selected based upon the set of candidate solutions. The current candidate solutions tend to cluster around the minima lower than the current value of f_M as the algorithm proceeds. The probability of the candidate solutions ultimately converging to the global minimum depends on the value of N, the complexity of the objective function, and how the initial candidate solutions are chosen.

The method of determining the new candidate solution to be included in the set in each iteration affects the performance of CRS. Price (Ref. 20) suggests the following method when there are n input variables. At each iteration, $n+1$ distinct points $R_1, ..., R_{n+1}$ are randomly chosen from the current candidate solutions, and these constitute a simplex in n-space. The point R_{n+1} is arbitrarily taken as the pole (designated vertex) of the simplex, and the next candidate solution point is calculated with the following equation.

$$\bar{P} = 2\bar{G} - \bar{R}_{n+1} \qquad (1)$$

Where, $\bar{P}, \bar{G}, \bar{R}_{n+1}$ represent the position vectors of the corresponding points and is the centroid of points $R_1, ..., R_n$. Price (Ref. 21) modified the algorithm to speed up convergence without significantly reducing the global search capability. In the

modified algorithm, R_1 is always the point L, which has the least function value, and n points are randomly chosen from $N–1$ points. Hence, L can never be the pole of the simplex.

In this study, the modified CRS is used in order to determine the optimal conditions for the welding process. The optimization process of the modified CRS can be summarized as follows:

Step 1. Define the upper and lower bounds.

Step 2. Choose random N points over V; evaluate the objective function at each point; store the positions and function values in an array A.

Step 3. Find the point M with the greatest function value f_M, and the point L with the least function value f_L.

Step 4. Choose random n distinct points $R_2, ..., R_{n+1}$ excluding L. Let $R_1 = L$, and determine the centroid G of points $R1, ..., Rn$. Compute the next trial point .

Step 5. If P is within V, then evaluate f_P and go to Step 6; else, return to Step 4.

Step 6. If $f_P < f_M$, then replace M by P in A and go to Step 7; else, return to Step 4.

Step 7. If the stop criterion is satisfied when the value of the objective function is less than a predefined small number, then stop; otherwise return to Step 3.

Experimental Procedure

The base metal to be welded was mild steel with a thickness of 4.0 mm. The joint type was a square groove, and the root opening was fixed at 1.2 mm. The electrode wire was an AWS classification ER 70S-6 with a diameter of 1.0 mm. The electrode polarity was direct current electrode positive. Contact tube-to-work distance was 20 mm. The shielding gas used in the experiment was 80%Ar + 20%CO_2, and the flow rate was 20 L/min. The power source used in the welding process was a machine with a constant voltage characteristic. The search range of each welding parameter was as follows: The search range of the wire feed rate was 11.3 ~23.0 (cm/s), the search range of the welding voltage was 18 ~ 27 V, and the search range of the welding speed was 2 ~ 11 mm/s. Welding was performed under each welding condition determined through CRS, and the front bead height, back bead width, and penetration were consequently measured. A copper backing bar was used with the distance between the base metal and the copper backing bar set at 1 mm.

Results and Discussion

The purpose of this optimization problem was to obtain a complete penetration weld. The following objective function was formulated by using the front bead height, back bead width, and penetration affecting the weld quality, as shown in Fig. 1.

$$f = (H_d - H)^2 + (W_d - W)^2 + (P_d - P)^2 \quad (2)$$

where H_d, W_d, and P_d are the desired front bead height, back bead width, and penetration, while H, W, and P are the front bead height, back bead width, and penetration obtained through the experiment. In the optimization problem, H_d = 1.5 mm, W_d = 4.0 mm, P_d = 5.0 mm are selected as the desired bead geometry. Obtaining the desired bead geometry thus implies finding the welding parameters minimizing f.

The determination of the search region is one of the important steps of the overall the optimization procedure. One of the

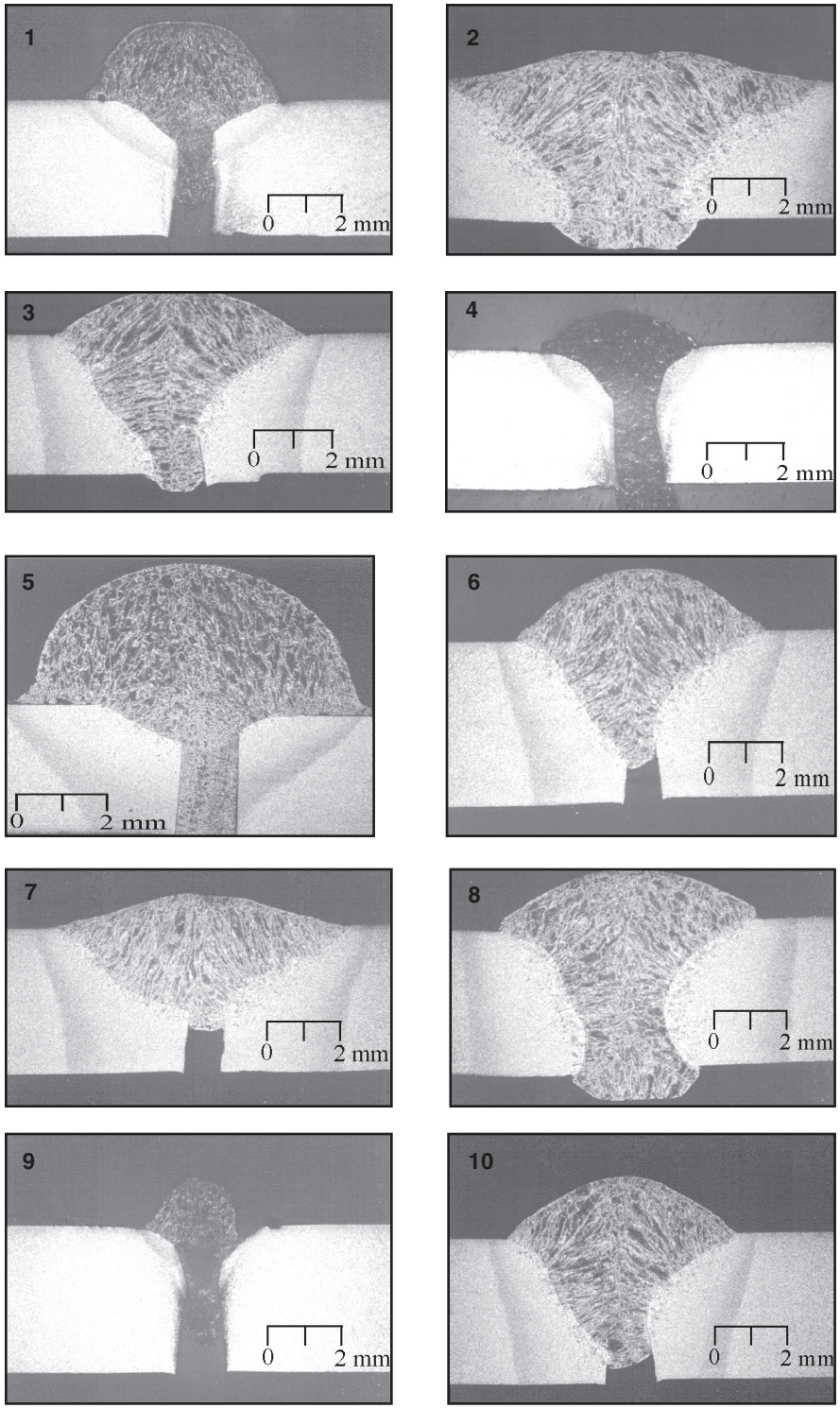

Fig. 2 — Cross sections of welds made with various combinations (Table 2) of process variables produced (in/from) the initial candidate solutions.

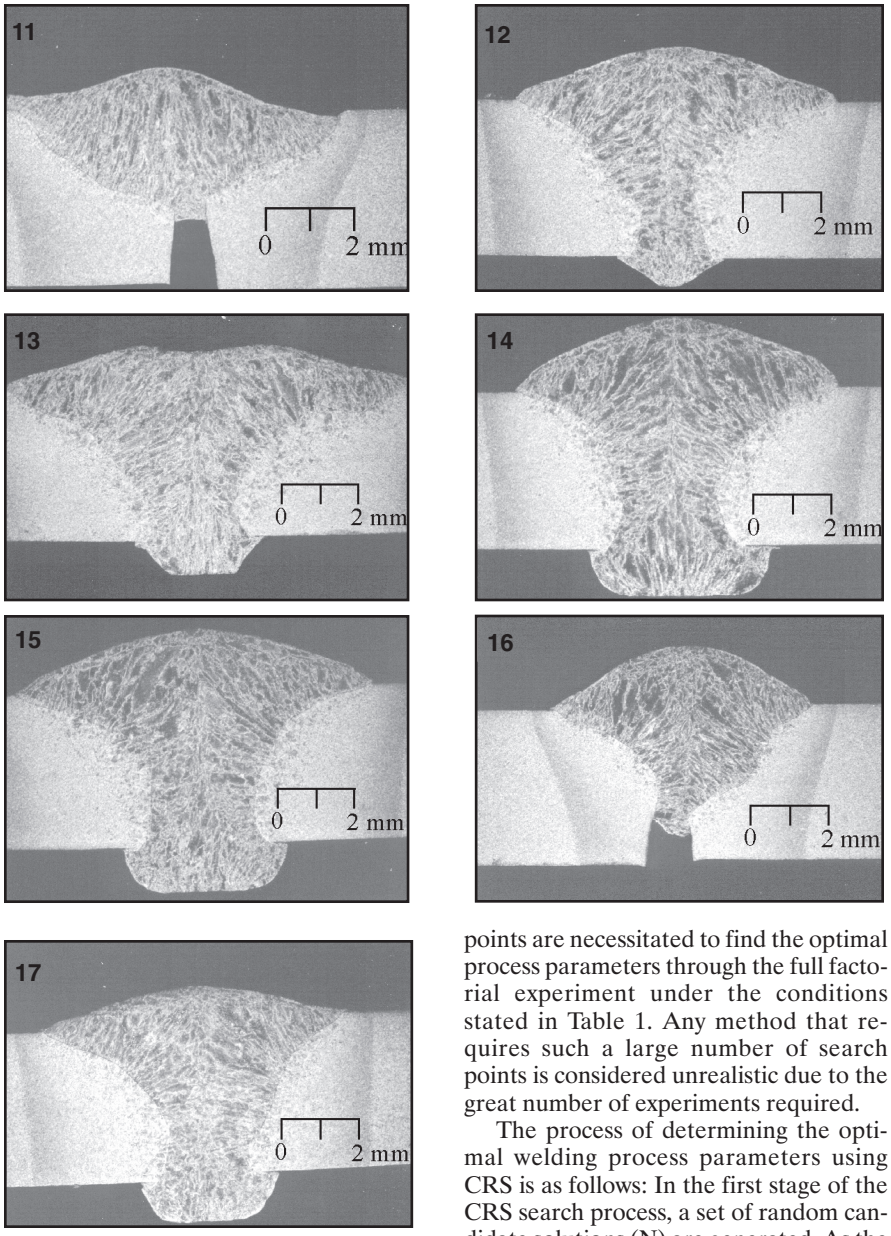

Fig. 3 — Cross sections of welds made with various combinations (Table 3) of process variables produced at each iteration.

choice methods is based on previous works or welding books. It is difficult to get all the information on input parameters from previous works or welding books. However, the combination of previous works, welding books, and welding engineer's experience can give useful information on the search region. In this paper, the search region was determined based on a previous work (Ref. 22) and authors' experience. The search range of the process parameters and the number of levels to find the welding process parameters that minimize Equation 2 are as shown in Table 1. Hence, 1000 search points are necessitated to find the optimal process parameters through the full factorial experiment under the conditions stated in Table 1. Any method that requires such a large number of search points is considered unrealistic due to the great number of experiments required.

The process of determining the optimal welding process parameters using CRS is as follows: In the first stage of the CRS search process, a set of random candidate solutions (N) are generated. As the value of N increases, the number of experiments increases. Thus, the convergence of the algorithm may be slow (Ref. 21). The appropriate choice of N is a matter of experience. In this study, the search was performed with ten initial candidate solutions — Table 2.

Welding was conducted three times under each welding condition determined through the CRS algorithm. Three samples were cut from each welding condition and the transverse face of the weldment was ground and macroetched. Then, the front bead height, back bead width, and penetration acquired from each welding condition were measured and the mean of each value was applied to Equation 2 in order to calculate the objective function value. The ten welding conditions and the experiment results under each condition are shown in Table 2. Figure 2 shows the macro cross sections of the weld formed under each welding condition. The welding conditions of experiment number 8 produced the most satisfactory welding quality, and the welding conditions of experiment number 9 produced the worst quality welds among the initial ten welding conditions. The back bead is not formed under the welding conditions of experiments number 1, 3–7, 9, and 10. On the other hand, under the conditions of experiments 2 and 8, the back bead is generated, melt-through is prevented by the backing bar, and the penetration is limited.

In the next stage, welding condition M with the greatest objective function value f_M and welding condition L with the least objective function value f_L are determined through the results of the experiments on the initial candidate solutions. Three welding conditions are then randomly selected from the nine welding conditions excluding L to comprise a three-dimensional simplex, and the next search point P is determined by L and the three selected conditions through equation $\bar{P} = 2\bar{G} - \bar{R}_{n+1}$. In this equation, R_{n+1} is the welding conditions selected last, while G is the centroid of all of the points excluding R_{n+1}. The search is performed with point M excluded from the candidate solution set and point P included in the set when the search point P exists within the search range and the objective function value f_P is smaller than f_M.

In this study, the welding conditions of experiment number 9 correspond with point M, and the objective function value (f_M) under these conditions is 32.0. In addition, the welding conditions of experiment number 8 correspond with point L, and the objective function value (f_L) under these conditions is 0.4. The three welding conditions randomly selected to comprise the simplex are the welding conditions of experiments 2, 6, and 5, and thus the simplex is comprised of the welding conditions of experiments numbers 8, 2, 6, and 5. The welding conditions of experiment number 5 become the pole of the simplex, and centroid G is calculated from the welding conditions of experiments numbers 8, 2, and 6. The welding conditions, which become the next search point obtained from Equation 1, are comprised of a wire feed rate of 13.9 cm/s, welding voltage of 24 V, and welding speed at 7 mm/s. The front bead height, back bead width, and penetration obtained after welding under these conditions are 1.4, 0.0, and 2.2 mm, respectively, and the objective function value f_P is 23.9. Since f_P is smaller than f_M, experiment number 8, which corresponds with M, is eliminated from the candidate solution set, and the welding condition of point P is included instead.

This process is repeated until satisfac-

tory weld quality (f'' 0.1) is obtained. In this study, satisfactory weld quality is obtained in the 8th iteration, and only 17 experiments are necessitated since the near optimal condition is found in the 8th iteration. The welding process parameters and experiment results from the 2nd to 8th iteration are shown in Table 3. Figure 3 shows the macro cross section of the weld under each welding condition. The final candidate solutions are comprised of the welding conditions of experiment and numbers 2, 3, 7, 8, and 12–17. Figure 4 shows the average objective function value obtained from the candidate solutions for each iteration. Figure 4 demonstrates that the averages of the objective function values of the 10 candidate solutions decrease as the iteration increases.

The welding conditions determined in the 8th iteration as the optimal welding conditions are a wire feed rate of 16.5 cm/s, welding voltage of 22 V, and welding speed at 5 mm/s. The front bead height, back bead width, and penetration obtained under these conditions are 1.3, 3.9, and 5.0 mm, respectively. The results obtained through the study are satisfactory with the optimal condition found in the 8th iteration despite the slight disparity with the weld geometry values initially established. The CRS algorithm is a global optimization algorithm similar to the genetic algorithm. However, this does not guarantee that the optimal welding condition obtained by the CRS algorithm is the global minimum because the global minimum depends on the number of initial random candidate solutions, complexity of the objective functions and methodology in which the individual candidate solution is chosen. Since the specific rates of convergence differ according to the initial candidate solutions and stochastic selection mechanism, another run may require many iterations.

It should be noted that the obtained welding conditions are valid only when the welding input parameters being considered are within the limits of those investigated.

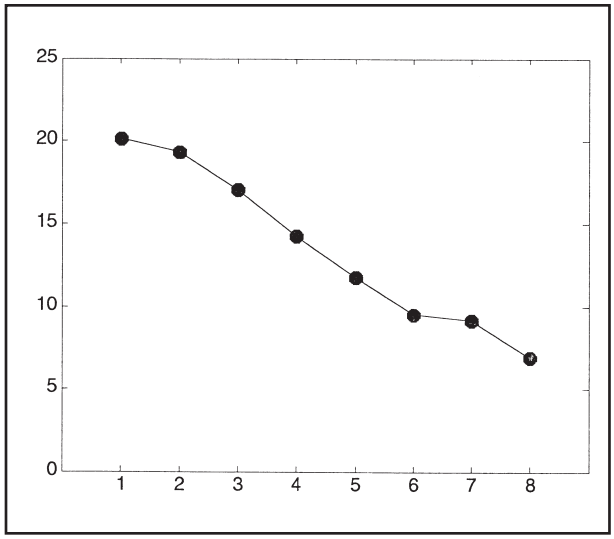

Fig. 4 — Results of the controlled random search procedure.

The CRS algorithm explained above is effective in finding near-optimal conditions; however, the convergence performance after reaching near-optimal conditions diminishes drastically. Thus, continuing experiments with the CRS algorithm after finding the near-optimal conditions are ineffective. Also, the CRS algorithm does not give models between input variables and output variables. Therefore, in order to overcome these problems a combination of regression or neural network modeling and optimization algorithm was used around the near optimal conditions to develop welding process models and to optimize weld bead geometry.

Table 2 — Results of the Initial Candidate Solutions

Experiment Number	Feed Rate (cm/s)	Voltage (V)	Speed (mm/s)	Height (mm)	Width (mm)	Penetration (mm)	Objective Function
1	20.4	19	8	2.0	0.0	1.5	28.5
2	19.1	24	5	1.2	4.6	5.0	0.5
3	16.5	21	7	1.7	0.0	3.7	17.7
4	13.9	18	9	0.5	0.0	1.5	29.3
5	17.8	19	3	3.2	0.0	2.2	26.7
6	12.6	21	6	1.8	0.0	2.5	22.3
7	11.3	23	6	1.5	0.0	2.0	23.8
8	15.2	20	4	2.0	3.6	5.0	0.4
9	21.7	20	9	1.4	0.0	1.0	32.0
10	16.5	21	7	2.1	0.0	3.0	20.4

Table 3 — Results of the Next Iterations

Experiment Number	Feed Rate (cm/s)	Voltage (V)	Speed (mm/s)	Height (mm)	Width (mm)	Penetration (mm)	Objectibe Function
11	13.9	24	7	1.4	0.0	2.2	23.9
12	11.3	22	4	1.8	1.6	4.3	6.3
13	15.2	24	4	1.5	3.0	5.0	1.0
14	21.7	22	5	2.1	5.1	5.0	1.6
15	17.8	22	4	2.2	4.8	5.0	1.1
16	13.9	21	6	1.9	0.0	3.0	20.2
17	16.5	22	5	1.3	3.9	5.0	0.1

Conclusion

The CRS method is proposed in this study as a method of determining the welding conditions that produce the desired weld geometry. The objective function does not have to be differentiable when conducting optimization through CRS. In addition, the CRS algorithm is relatively easy to program. The welding process parameters, which generate a complete penetration weld, are determined through the CRS. The input variables are the wire feed rate, welding voltage, and welding speed, while the output variables are the front bead height, back bead width, and penetration of the bead geometry. The welding conditions, which produce the desired output variables, can be determined through systematic experiments even in systems considerably difficult to model, such as the welding process, through the CRS method.

References

1. Myers, R. H., and Montgomery, D. H. 1995. *Response Surface Methodology,* John Wiley & Sons, Inc., pp. 9–12.

2. O'Brien, R. L. (Editor) 1991. *Welding Handbook*, 8th Ed., Vol. 2, Welding process, Miami, Fla.: American Welding Society, pp. 110–155.

3. Konkol, P. J., and Koons, G. F. 1978. Optimization of parameters for two-wire AC-AC submerged arc welding. *Welding Journal* 57(12): 367-s to 374-s.

4. Yang, L. J., Chandel, R. S., and Bibby, M. J. 1993. The effects of process variables on the weld deposit area of submerged arc welding process. *Welding Journal* 72(1): 11-s to 18-s.

5. Gunaraj, V., and Murugan, N. 1999. Application of response surface methodology for predicting weld quality in submerged arc welding of pipes. *Journal of Materials Processing Technology* 88: 266–275.

6. Andersen, K., Cook, G. E., Karsai, G., and Ramaswamy, K. 1990. Artificial neural networks applied to arc welding process modeling and control. *IEEE Trans. on Industry Applications* 26(5): 824–830.

7. Li, P., Fang, M. T. C., and Lucas, J. 1997. Modeling of submerged arc weld beads using self-adaptive offset neural network. *Journal of Materials Processing Technology* 71: 288–298.

8. Meng, T. K., and Butler, C. 1997. Solving multiple response optimization problems using adaptive neural networks. *International Journal of Advanced Manufacturing Technology* 13: 666–675.

9. McConnell, I. A., and McPherson, N. A. 1997. The application of statistical process design to a FCAW process. *Welding Journal* 76(10): 412-s to 416-s.

10. Tarng, Y. S., and Yang, W. H. 1998. Optimization of the weld bead geometry in gas tungsten arc welding by the Taguchi method. *International Journal of Advanced Manufacturing Technology* 14: 549–554.

11. Green, R. 2004. How to optimize mild steel GMAW. *Welding Journal* 83(12): 30–32.

12. Murugananth, M., Babu, S. S., and David, S. A. 2004. Optimization of shielded metal arc welding metal composition for Charpy toughness. *Welding Journal* 83(10): 267-s to 276-s.

13. Subramaniam, S., White, D. R., Jones, J. E., and Lyons, D. W. 1999. Experimental approach to selection of pulsing parameters in pulsed GMAW. *Welding Journal* 78(5): 166-s to 172-s.

14. Rao, S. S. 1996. *Engineering Optimization*, John Wiley & Sons, Inc.

15. Kim, D., and Rhee, S. 2001. Optimization of arc welding parameters using a genetic algorithm. *Welding Journal* 80(7): 184-s to 189-s.

16. Kim, D., and Rhee, S. 2004. Optimization of a gas metal arc welding process using the desirability function and the genetic algorithm. *Proceedings of the Institute of Mechanical Engineering, Part B — Journal of Engineering Manufacture*, 218, pp. 35–41.

17. Goldberg, D. E. 1989. *Genetic Algorithms in Search, Optimization, and Machine Learning*, Addison-Wesley.

18. Grefenstette, J. J. 1986. Optimization of control parameters for genetic algorithms. *IEEE Trans. on Syst. Man Cybern* 16(1): 122–128.

19. Steinberg, D. M., and Hunter, W. G. 1984. Experimental design: review and comment. *Technometrics* 26(2): 71–97.

20. Price, W. L. 1977. A controlled random search procedure for global optimization. *The Computer Journal* 20(4): 367–370.

21. Price, W. L. 1983. Global optimization by controlled random search. *Journal of Optimization Theory and Applications* 74(3): 333–348.

22. Nakamura, M. 1972. Technical points of manual operation for CO_2 semi-automatic arc welding. *Journal of JWS* 41(7): 1041–1055.

CAN WE TALK?

The *Welding Journal* staff encourages an exchange of ideas with you, our readers. If you'd like to ask a question, share an idea or voice an opinion, you can call, write, e-mail or fax. Staff e-mail addresses are listed below, along with a guide to help you interact with the right person.

Publisher/Editor
Andrew Cullison
cullison@aws.org, Extension 249
Article Submissions

Senior Editor
Mary Ruth Johnsen
mjohnsen@aws.org, Extension 238
Feature Articles

Associate Editor
Howard Woodward
woodward@aws.org, Extension 244
Society News
Personnel

Assistant Editor
Kristin Campbell
kcampbell@aws.org, Extension 257
New Products
News of the Industry

Managing Editor
Zaida Chavez
zaida@aws.org, Extension 265
Design and Production

Advertising Sales Director
Rob Saltzstein
salty@aws.org, Extension 243
Advertising Sales

Advertising Production Coordinator
Frank Wilson
fwilson@aws.org, Extension 465
Advertising Production

Advertising Sales & Promotion Coordinator
Lea Garrigan Badwy
garrigan@aws.org, Extension 220
Production and Promotion

Peer Review Coordinator
Doreen Kubish
doreen@aws.org, Extension 275
Peer Review of Research Papers

Welding Journal Dept.
550 N.W. LeJeune Rd.
Miami, FL 33126
(800) 443-9353
FAX (305) 443-7404