Precision Laser Brazing Utilizing Nonimaging Optical Concentration

Even-joint illumination for high-quality laser brazing was attained, and the method can be tailored to part geometry

V. R. DAVÉ, R. W. CARPENTER, D. T. CHRISTENSEN AND J. O. MILEWSKI

ABSTRACT. In the present work, a Nd:YAG laser is used in conjunction with energy-flux concentrators to perform precision brazing of small tube assemblies. Polished copper reflectors in the shape of either a wedge or a cone are used to direct and concentrate infrared laser energy onto the tube joint and alloy preform to accomplish the braze. These reflectors were designed using optical ray-tracing software employing the principles of nonimaging optics and multiple beam reflections to create a tuned waveguide that can be adapted to a variety of shapes.

The ray-tracing algorithm also calculates the incident energy flux on the tubes. This information is used in a finite difference thermal model to predict processing times. Experimental trials and metallographic evaluation for brazes made in 304 stainless steel tubing using Au-18% Ni filler material are presented. This method and its enabling models are validated, offering new processing techniques that may be better suited than current methods for some applications. Proposed extensions of this work to other applications are also discussed, including a methodology to adapt brazing utilizing nonimaging optical concentration to complex part geometries.

Introduction

Precision brazing of tube assemblies is important in a wide variety of manufacturing applications for aerospace, medical and other precision components. Furthermore, it is desirable for certain applications to develop localized brazing methods that limit the heat input and do not require the entire assembly to be raised to an elevated temperature. Furnace brazing is clearly impossible in such cases, but the process substituted for furnace brazing must result in equal, or better, joint quality. Localized brazing of such components can be problematic using techniques such as induction heating on account of the variations in material cross section and the overall problem of small part dimensions (Refs. 1, 2).

Laser brazing has been used successfully in previous applications for small precision components (Refs. 3–5), but in all cases, direct laser illumination was employed. It may not be possible in all cases to directly irradiate the assembly to be brazed due to geometric constraints, so a concentrator concept was developed in this present work to ensure uniform energy deposition while supplying incident laser energy from one side only.

KEY WORDS

Laser
Brazing
Stainless Steel
Nonimaging Optics
Uniform Illumination
Thermal Model
Ray Tracing

Witherell and Ramos (Ref. 4) have noted that laser brazing through direct illumination has the following potential disadvantages:

1) For small components, three or more axis CNC is needed to keep the beam on the joint, and such positioners are expensive.

2) Direct laser illumination can produce very rapid cooling rates, which, on one hand, can be advantageous in achieving stronger joints, but it may also result in unacceptable ductility loss for some braze filler materials.

3) Finally, the possibility exists of liquid metal embrittlement/intergranular cracking under the rapid thermal cycles and accompanying high thermal stresses associated with direct laser illumination, although the precise conditions under which such cracking occurs in laser brazing is still not completely understood.

Furthermore, it is the authors' experience that direct laser or electron beam illumination may result in asymmetric heating and cooling within the joint, thereby producing an unacceptable range of properties within the joint region. The present multidirectional illumination technique can produce spatially tailored energy distributions that can be temporally modulated to control cooling rates. The purpose of this work is to demonstrate a new technique that can rapidly perform precision brazes using lasers (and potentially other concentrated IR heat sources) on a geometry that would be more difficult to braze using induction methods due to its small size and the desire to limit the heat-affected region. Furthermore, an additional objective is to create computational models

V. R. DAVÉ, R. W. CARPENTER, and J. O. MILEWSKI are with Los Alamos National Laboratory, Los Alamos, N.Mex. D. T. CHRISTENSEN is with Rice University, Houston, Tex.

that will allow the prediction and optimization of concentrator geometry, part location and braze thermal cycles so that this method is extendable to other part configurations.

Modeling of Energy Flux Using Ray Tracing

One of the first researchers to analyze and exploit the principles of nonimaging optical concentration was Mendenhall, who in 1911 described the use of a wedge-shaped optical concentrator (Ref. 6). Many subsequent studies have been undertaken to apply nonimaging concentrators for such applications as solar collectors, infrared and optical detectors, and optical pumping (Ref. 7). In this work, a methodology for the application of the principles of nonimaging optics and computational ray tracing to the understanding and design of high-performance laser weld joints (Refs. 8–11) was extended and enhanced for the prediction and optimization of the brazing of small-diameter tubing.

Two 3-D models were created using the *OptiCad* optical ray-tracing software package. Two simple energy concentration devices, a wedge and a cone, were modeled along with a two-piece braze joint assembly and a heat source, as shown in Figs. 1 and 2. The size, location and orientation of each component were adjustable within the model. The model also can represent the heat source as either a distributed collimated beam or a localized focused beam of specified divergence and energy. The heat sources are represented by a distribution of rays, each carrying a specified amount of energy that is deposited within the model upon surfaces that the ray impinges. These surfaces are made up of an absorptive feature that records the location of the ray impingement and amount of energy deposited and a reflective feature that redirects the unabsorbed remainder of energy back into the 3-D model.

The model employs nonsequential ray tracing that allows a ray to impact any surface in any order. As the rays propagate throughout the model, they give up energy until they lose 99% of their original energy and are then terminated. To obtain an adequate statistical representation of energy propagation, typically 10,000 rays were traced over a region of space defined by the distributed heat source object. The reflective surfaces of the copper concentrators were defined to have a reflective coefficient of 98%. No energy absorption is recorded for the reflector walls. The tube sections were defined to possess an energy absorption value of 35%, typical for Nd:YAG radiation on stainless steel, and, conversely, a reflective value of 65% (Ref. 12). Energy impinging upon the tube section can reflect back onto the walls and back onto the tube, allowing multiple absorption opportunities. Beneath the partially reflective walls of the tube geometry lies a mesh of absorptive detector units, which record the location and intensity of energy deposited for all impinging rays. Braze preform geometry was not considered within this model. The effects of angle-dependent absorption, beam polarization and scattering were also not considered (Ref. 11). Energy output was displayed by graphing the absorptive mesh data, which is also used to calculate total energy absorption by the tube and determine the uniformity of tube surface illumination.

The models were run on a laptop computer, and the tracing of 10,000 rays required approximately 2 min of run time. The total energy input into the system was distributed evenly among the number of rays specified. Variations in wedge and cone geometry, laser beam size and location, and tube joint location were made to develop a qualitative appreciation for the interaction of these parameters and a quantitative output of energy absorption verse position of the braze joint. The use of these ray-tracing models provided insight and direction for experimental trials and input of the illumination data into the heat flow models.

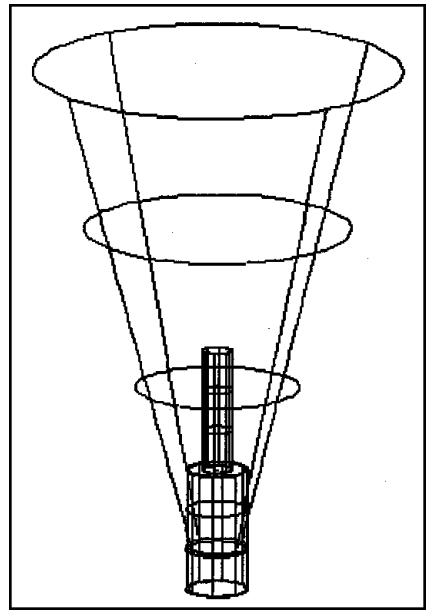

Fig. 1 — Model of conical concentrator showing part placement within concentrator.

Experimental Procedure

The laser and test chamber are shown in Fig. 3. A Raytheon SS-500, 400-W av-

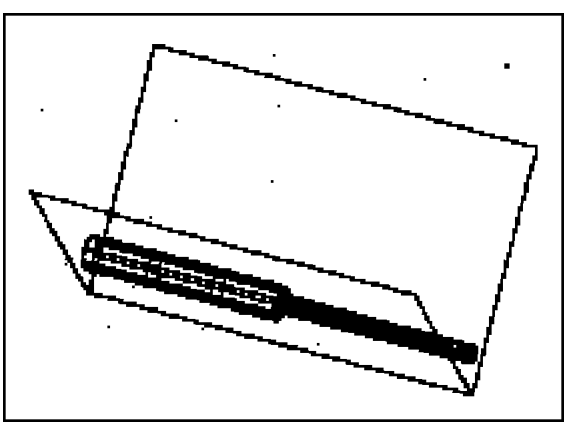

Fig. 2 — Model of wedge concentrator showing part placement within concentrator.

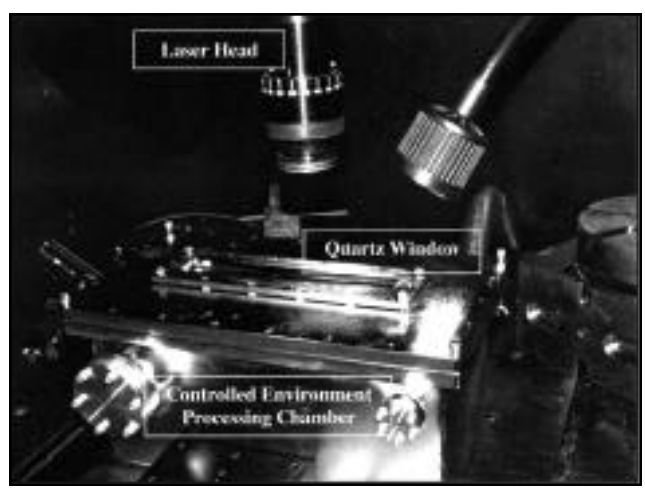

Fig. 3 — Braze processing chamber and its relative position with respect to the laser.

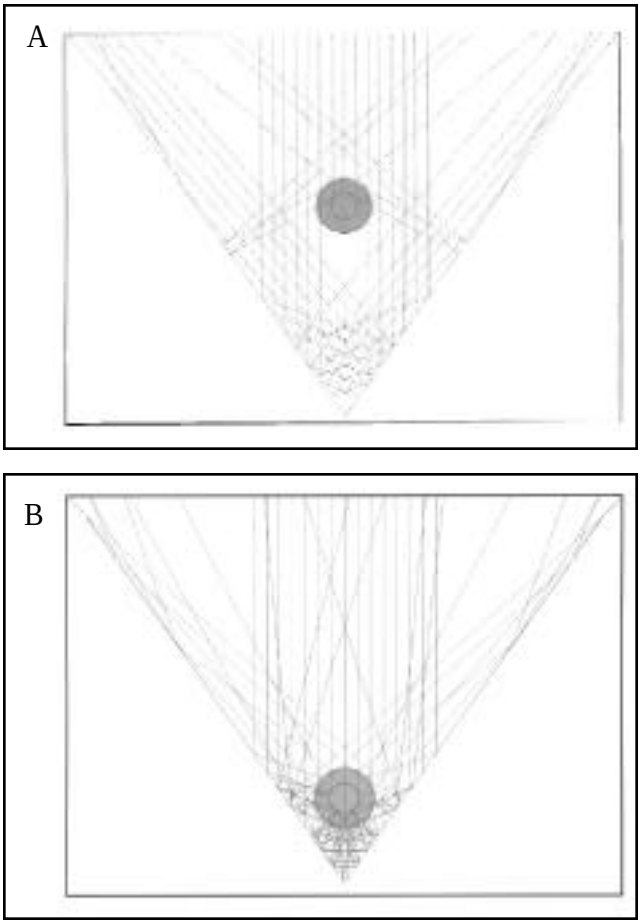

Fig. 4 — A — Nonoptimal placement of tube within wedge concentrator; B — optimal placement of tube within wedge concentrator.

erage power, pulsed Nd: YAG laser utilizing hard optics beam delivery was used. A test chamber was constructed using a sealed stainless steel box with a 2-in.-diameter quartz glass window. A roughing pump port and process atmosphere inlet allowed the pump down and backfill of the chamber to reduce the oxygen and moisture to acceptable processing levels. Both high-purity argon and argon/6% hydrogen were investigated as shielding and partially active braze environments, and most braze trials in this work were performed using the argon/6% hydrogen gas mixture (a commercially available welding gas). The 304 stainless steel tubular samples were a concentric arrangement of a 0.063-in. (1.6-mm) OD tube within a 0.125-in. (3.18-mm) OD tube. The concentric joint clearance was approximately 0.005 in. (0.127 mm). The braze material was 0.025-in. (0.635-mm) diameter Nioro (Au/18% Ni) wire cut and formed into rings. Both the tube and rings were cleaned using alkali cleaner followed by deionized water rinsing and were given a final rinse in high-purity ethanol immediately prior to assembly and brazing. The tubular test samples with braze-alloy ring preforms were placed within the energy concentrators at locations indicated by the preliminary model results. These were then positioned beneath the window allowing direct delivery of the laser beam into the optical concentrator fixture.

In the case of the conical concentrators, the final focusing lens of the laser was not used, allowing the roughly 0.4-in. (10-mm) beam to pass through the window into the concentrator. This eliminated one degree of freedom from the system, namely that of laser focal length, and allowed greater access to the experimental setup. In the case of the wedge-shaped concentrator, a beam aperture external to the laser cavity was used to reduce the diameter of the beam in order to reduce the extent of braze-joint illumination and heating. The parameters used to perform these brazes are given in Table 1. Braze illumination was initiated, observed for braze wetting and flow, then ended. Samples were visually inspected, He leak checked to ensure hermeticity, macrophotographed and metallographically examined using standard procedures.

Table 1 — Laser and Process Parameters

Parameter	Wedge concentrator	Conical concentrator
Laser power (avg.)	75 W	75 W
Pulse length	7.2 ms	7.2 ms
Repetition rate	50 pps	50 pps
Beam diameter	10 mm	3 mm
Beam aperture	none	0.170 in.
Shield gas	Ar-6% H	Ar-6% H
Illumination time	30 s	80–100 s

Table 2 — Assumed Thermophysical Properties for the Thermal Model

Quantity	Value
κ, Thermal conductivity	0.205 W/cm-°C
ρ, Density	8 g/cm^3
C, Heat capacity	0.568 J/g-°C
α, Thermal diffusivity	0.045 cm^2/s
A, Cross-sectional area of tube	0.0578 cm^2
P, Outer perimeter of tube	0.997 cm
h, Convective heat transfer coefficient (estimated using data from Refs. 15 and 16)	0.0015–0.0025 W/cm^2-°C
L, Joint length that is heated	0.445 cm

Thermal Modeling — Prediction of Braze Time

The transient thermal response of the tube assembly was calculated given an energy flux profile as provided by the ray-tracing model. A simple thermal model was constructed, which captured the following physical effects: heat conduction, flux distribution on the parts to be heated (assumed axisymmetric and, therefore, varies only with axial position) and convective cooling of the assembly. Since the radial flux distributions are assumed to be uniform around the circumference of the assembly and the length of the assembly is much greater than its diameter, a one-dimensional transient heat conduction model was chosen. Heat loss due to convective cooling was accounted for by using a physically reasonable value for the Newtonian cooling heat transfer coefficient, and the resulting mathematical treatment is essentially identical to the analysis of a heat exchanger fin (see Ref. 13 for a detailed background discussion on such problems). The relevant dif-

ferential equation in this case is

$$\frac{1}{\alpha}\frac{\partial\theta}{\partial t} = \frac{\partial^2\theta}{\partial\chi^2} - m^2\theta + \frac{Q_0(x)P}{kA}$$

$$m^2 \equiv \frac{hP}{kA};\theta \equiv T - T_0 \tag{1}$$

where $Q_0(x)$ is the flux over $0 \le x \le L$, and $t \ge 0$; α is the thermal diffusivity; T_0 is the ambient air temperature, k is the thermal conductivity; A is the cross-sectional area; h is the Newtonian cooling coefficient; and P is the outer perimeter of the tube.

Note it is assumed that convection is on the outside of the tube and assumed to be negligible on the inside of the tube. This equation may be cast into dimensionless form as follows:

$$\tau \equiv \frac{L^2}{\alpha};t^* \equiv \frac{t}{\tau}$$

$$x^* \equiv \frac{x}{L};\theta^* \equiv \frac{T - T_\infty}{T_{liquidus} - T_\infty}$$

$$Q^* \equiv \frac{Q_o P_{outer} L^2}{\left(T_{liquidus} - T_\infty\right) k \quad A};\kappa^2 \equiv m^2 L^2 \tag{2}$$

$T_{liquidus}$ is the liquidus temperature of the braze alloy. The resulting dimensionless equation is

$$\frac{\partial\theta^*}{\partial t^*} + \kappa^2\theta^* = Q^*\left(x^*\right) + \frac{\partial^2\theta^*}{\partial x^{*2}} \tag{3}$$

This last equation can be solved numerically via an unconditionally stable explicit finite difference scheme. The specific scheme chosen is the DuFort-Frankel scheme (Ref. 14). The finite difference relations and resulting equation are

$$\frac{\partial\theta^*}{\partial t^*} \quad \frac{\zeta_{i,n+1} - \zeta_{i,n-1}}{2\left(\Delta t\right)}$$

$$\frac{\partial^2\theta^*}{\partial x^{*2}} \quad \frac{\zeta_{i+1,n} - \zeta_{i,n+1} - \zeta_{i,n-1} + \zeta_{i-1,n}}{\left(\Delta x\right)^2},$$

$$\theta^* \quad \frac{1}{2}\left(\zeta_{i,n-1} + \zeta_{i,n+1}\right) \tag{4}$$

where i and n are the spatial and temporal indices, respectively. So the equation becomes

$$\frac{\zeta_{i,n+1} - \zeta_{i,n-1}}{2\left(\Delta t\right)} =$$

$$\frac{\zeta_{i+1,n} - \zeta_{i,n+1} - \zeta_{i,n-1} + \zeta_{i-1,n}}{\left(\Delta x\right)^2} -$$

$$\frac{\kappa^2}{2}\left(\zeta_{i,n-1} + \zeta_{i,n+1}\right) + Q^*\left(i \quad \Delta\right) \tag{4a}$$

As an example of a thermal calculation, the conical energy flux concentrator is used. The assumed thermal properties and tube geometry are shown in Table 2. For the beam conditions shown in Table 1 and a tube stickout length of 0.175 in. (4.45 mm), the resulting average flux on the outside of the tube is 1.19 W/cm^2, as calculated by the ray-tracing algorithm. The average flux impinging on the exposed end of the tube is substantially higher, namely 120 W/cm^2. Using these values for heat input together with the total exposed surface area of the joint, we find the total average power delivered to the joint is 7.52 W, which is 10% of the incident beam power. This illustrates another advantage of nonimaging optical concentration. Although the total power absorbed by the workpiece is modest (only 7.52 W), it is directed and concentrated at regions of the part that allow for a successful braze.

For the purposes of this initial calculation, the flux impinging on the sides of the tube is ignored since the value impinging on the end is significantly higher. Taking into account the difference in areas, this means the total power input to the tube will be underestimated by 7%. Furthermore, the thermal effects of the copper energy flux reflector will not be taken into account. In practice since there is some contact between the tube and the reflector, the reflector will act as a 'chill' that will extract some heat from the tube assembly. One complicating factor in the thermal analysis is that the braze ring is immediately adjacent to the end of the tube. The gold-alloy braze ring is a far superior IR reflector compared to the stainless steel, so its absorption properties will be different from that of the base material. As a limiting case, however, it will first be assumed that all of the energy reaching the braze ring/tube end is conducted into the tube. It should also be noted the changes in surface emissivity and absorptivity with temperature and phase change are not explicitly represented in this simple thermal model, and the values used are assumed to be average but representative values.

Under these assumptions, the calculations predict the joint should reach the melting temperature of Au-18%Ni (AMS 4787) in anywhere from 60 to 90 s, depending on the value of the convection heat transfer coefficient (range of assumed values shown in Table 2). Depending on the laser operating parameters, the time to experimentally obtain a satisfactory braze using the conical concentrator was 80–100 s, so the thermal model does a reasonably good job of predicting a process window for the brazing

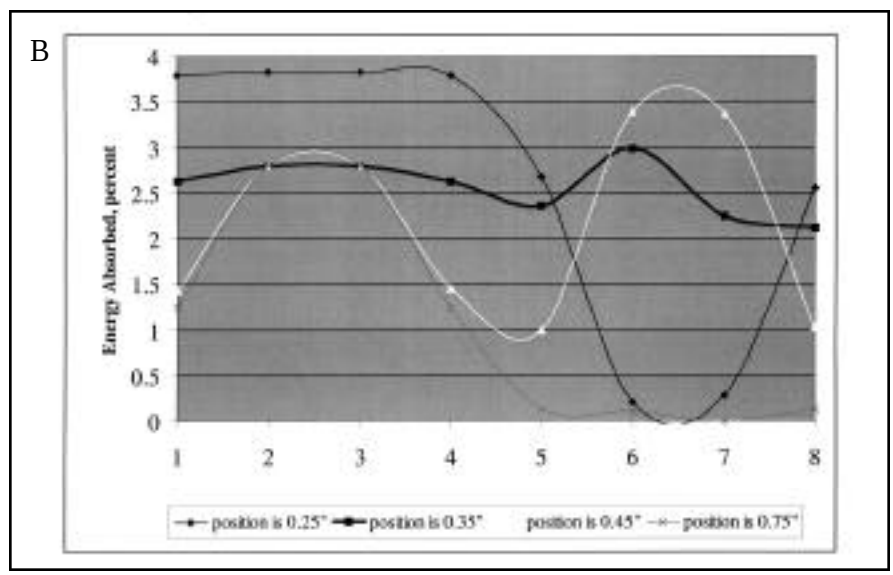

Fig. 5 — A — Film numbers assigned to circumferential positions of absorptive features in the part model in the ray-tracing simulation; B — Circumferential energy absorption as a function of part position.

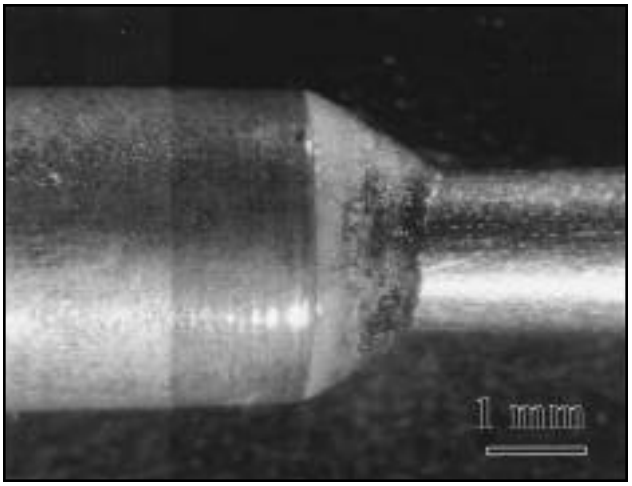

Fig. 6 — Macrophotograph of braze fillet.

Fig. 7 — Microphotograph of braze fillet and joint clearance.

time. Further refinements to the model may result in more accurate predictions. An example of a highly detailed model for laser brazing is that of Park and Na (Ref. 17). This model accounted for nonlinearities such as temperature-dependent material properties, latent heat effects due to braze alloy melting and temperature-dependent convective and radiative heat transfer modes as well. The model was implemented using a finite element scheme and was able to capture the qualitative and quantitative aspects of the thermal profiles during the laser brazing of a stud-to-plate joint.

Results

The ray-tracing models proved useful in visualization of energy impingement as a function of concentrator geometry, tube-joint location and energy-source geometry. Various wedge and cone angles were modeled. Focused and collimated beams of various locations and diameters were also modeled, as well as the position of the tube joint within the model. Figure 4A shows a nonoptimized placement of the tube within the wedge device allowing the energy flux to concentrate below the tube. Figure 4B shows an optimized placement of the tube within the energy flux, providing an even illumination (by direct and reflected rays) of the tube from all sides as well as maximizing energy absorption by the tube. To gain a more quantitative appreciation for the ability of the model to predict energy deposition uniformity, consider the circumferential energy deposition uniformity as a function of tube position in the V-block concentrator. Figure 5A schematically shows the film number designations that are assigned to various circumferential locations of the parts (large and small tubes) in the model. These, again, are absorptive features that record the energy deposition. Figure 5B shows the dependence of energy absorption by a given film plane on the height in inches from the center of the tube above the bottom of the V-block concentrator. Note the model predicts a part location of 0.35 in. (8.9 mm) results in the most even circumferential illumination pattern. While the optical models proved useful in optimizing an even illumination around the joint circumference, they cannot predict the heat flow and heat buildup as a function of material mass, and cannot, therefore, predict braze time. Therefore, experimentation and additional analysis, as provided by thermal heat flow modeling, was required.

As a result of the knowledge gained from the models, experiments were performed to prove the concepts proposed and validate and improve the models. The experiments proved the validity of the model's predictions of even illumination and energy concentration. The tubes were observed to heat rapidly and evenly all the way to brazing temperature within 30 s (wedge) to 100 s (cone) at 75-W incident power. Without the energy concentrators, the tube failed to reach brazing temperature irrespective of the duration of energy input at 75 W. Tube location adjustments, vertical within the cone and longitudinal within the wedge, were required to compensate for the unknown effects of heat flow. This again pointed toward the need and value of a heat flow model.

Optimized brazes displayed a bright, smooth, even and continuous fillet around the circumference of the joint. Figure 6 shows a macrograph of the surface of a braze made using a wedge-type concentrator. Figure 7 shows a micrograph of a braze made with the conical concentrator. The cross section shows good continuous wetting and capillary flow within the braze joint with no indication of overheating or intermetallic formation. The as-received microstructure of the tubing showed no alteration or detrimental effect on grain size due to the short thermal cycle. No alteration to the surface of the tubing such as localized melting or oxidation due to direct beam impingement was observed.

The simple thermal model presented in this work effectively predicts the process braze time well within 15% of the experimentally determined value. Further refinements of the thermal model along the lines of the model presented in Ref. 17 will improve its predictive capability, thus making the entire procedure of designing a braze process using the energy flux concentrator method very amenable to analysis. Further testing and refinement of the model is warranted, but these results clearly show the usefulness of the model in optimizing the use of optical concentrators for the application of small tube brazing. A logical extension of this methodology is to the application to joints of other sizes and more complex geometry. Another extension to this concept would be the use of other heat sources, such as IR heaters and direct diode lasers, to reduce the cost, size and enhance the portability and flexibility of such a method. Applications could include the retrofit and in-field or in-position repair of brazed assemblies. Lastly, it should be noted that the tube brazing technique demonstrated in this work may allow quality-assured production (final part quality is determined by *in-situ* process control) since the application of energy is precisely controllable, repeatable and predictable. In-process sensors

such as thermocouples can also be added to ensure adherence to a prescribed thermal profile.

Conclusions

This work has demonstrated the following:

1) Nonimaging optics in the form of energy flux concentrators can be effectively used in precision laser brazing to achieve uniform, multidirectional illumination that can be temporally modulated.

2) Nonsequential ray tracing of the optical system described above can provide valuable design guidance in the development of precision laser brazing processes.

3) The output from the ray tracing code can be used to predict joint temperatures and brazing times.

4) Lastly, this approach has the potential of being a quality-assured process because the key process variables are measurable, predictable, controllable and repeatable.

Future Work

Areas that remain to be investigated include the extension to more complex part geometry, the determination of the optimal concentrator design for a given part geometry, adaptive feedback control using thermocouples or other sensors and the introduction of other IR heat sources.

Work is in progress to apply this technique to various aerospace-tubing applications using quartz IR heat lamps as heat sources. Other potential application areas include other types of precision-brazed aerospace assemblies, transducers and medical implants (Ref. 18). Some devices such as medical implants and certain transducers may be heat sensitive, so it is important to consider the issue of total heat input.

Although the heat input to the reflectors is somewhat large for the two examples shown here (2250 J for the wedge reflector and 6750 J for the cone reflector), it is important to realize that not all this energy is absorbed by the workpiece. In fact, for the experimental case of the two tubes brazed in the conical reflector, we found that only 7.52 W of power was actually absorbed at the joint region and therefore conducted into the assembly, resulting in an effective heat input of only 677 J. This is approximately 10% of the total incident energy over the 90-s braze time. Although it may be possible to achieve lower heat inputs with more concentrated heat sources, such as in precision laser welding, further optimization of the nonimaging braze process and the addition of heat sinks and/or cooling gas can further reduce the total heat input in order to minimize damage to components that may be thermally sensitive.

For complex part geometries, the tuning of the concentrator design to ensure even part illumination can be accomplished through an intelligent optimization algorithm. The inverse problem of finding the concentrator geometry that results in even illumination for a given part geometry is converted to a conventional ray-tracing problem within the context of an optimization problem. First, the reflector geometry is described parametrically, with sets of the parameters then comprising individual 'guesses' within a genetic algorithm (GA). Then, the forward ray-tracing program is executed within the GA, and the energy deposition profiles for the part are recorded. The GA selects among many individuals and over many generations, eventually arriving at the concentrator geometry parameters that result in the most even energy distribution on the assembly to be brazed.

Acknowledgments

This research was funded under Department of Energy Contract No. W-7405-ENG-36. The authors wish to thank R. D. Dixon for his critical review and suggestions.

References

1. Berger, D. D. 1995. Vacuum brazing titanium to Inconel. *Welding Journal* 74(11): 35–38.

2. Spain, K. D. 1999. Could your brazing application benefit from induction heating? *Welding Journal* 78(10): 65–68.

3. Jeon, M. K., *et al.* 1998. A study on heat flow and temperature monitoring in the laser brazing of a pin-to-plate joint. *J. of Materials Processing and Technology* 82(1–3): 53–60.

4. Witherell, C. E., and Ramos, T. J. 1980. Laser brazing. *Welding Journal* 59(10): 267-s to 277-s.

5. Jones, T. A., and Albright, C. E. 1984. Laser beam brazing of small diameter copper wires to laminated copper circuit boards. *Welding Journal* 63(12): 34–47.

6. Mendenhall, C. E. 1911. On the emissive power of wedge shaped cavities and their use in temperature measurements. *The Astrophysical Journal* 33(2): 91–97.

7. Welford, W. T., and Winston, R. 1978. *The Optics of Nonimaging Concentrators*. New York, N.Y.: Academic Press.

8. U.S. Patent No. 5,760,365, Narrow Gap Laser Welding.

9. Milewski, J. O., and Sklar, E. 1996. Modeling and validation of multiple internal reflections for enhanced laser welding. *Modeling and Simulation in Materials Science and Engineering*. Institute of Physics, pp. 305–322.

10. Milewski, J. O., and Barbe, M. 1999. Modeling and analysis of laser melting within a narrow groove weld joint. *Welding Journal* 78(4): 109-s to 115-s.

11. Milewski, J. O., and Mustaleski, T. 1998. Modeling of laser energy in narrow gap joints. *Proceedings of the 5th International Conference on Trends in Welding Research*, Pine Mountain, Ga. Materials Park, Ohio: ASM International.

12. Steen, W. 1984. *Laser Materials Processing*. Orlando, Fla: Laser Institute of America.

13. Holman, J. P. 1986. *Heat Transfer*. New York, N.Y.: McGraw Hill Book Co.

14. DuFort, E. C., and Frankel, S. P. 1953. Stability conditions in the numerical treatment of parabolic differential equations. *Mathematical Tables and Aids to Computation* 7(43): 135–152.

15. Vargaftik, N. B.1975. *Tables on the Thermophysical Properties of Liquids and Gases*. Washington, D.C.: Hemisphere Publishing Corp.

16. McAdams, W. H. 1954. *Heat Transmission*. New York, N.Y.: McGraw Hill Book Co.

17. Park, J. S., and Na, S. J. 1998. Heat transfer in a stud-to-plate laser braze considering filler metal movement. *Welding Journal* 77(4): 155-s to 163-s.

18. De Jong, D. A., *et al.* 1984. Long-term intracranial pressure monitoring. *Medical Progress through Technology* 10(2): 89–96.