WELDING RESEARCH

SUPPLEMENT TO THE *WELDING JOURNAL*, MAY 2001
Sponsored by the American Welding Society and the Welding Research Council

The Determination of Hydrogen Distribution in High-Strength Steel Weldments Part 1: Laser Ablation Methods

Various methods for analyzing total hydrogen distributions in HSLA 100 welds were investigated

BY R. D. SMITH II, G. P. LANDIS, I. MAROEF, D. L. OLSON AND T. R. WILDEMAN

ABSTRACT. The development of advanced analytical methods for hydrogen distribution measurement across the weld is reported. The methods also distinguish between total and diffusible hydrogen. The project consisted of two phases: first, various types of instrumentation were evaluated for their use on welded steel. In the second phase, a suitable method was selected and investigated in more detail. The results suggest methods using laser ablation are capable of distinguishing qualitative differences in hydrogen concentrations in different areas of the weld. Deuterium addition to the shielding gas serves as a tracer, allowing a better understanding of hydrogen sources, *i.e.*, surface contamination. This research also led to the development of a diffusible hydrogen sensor suitable for field use, described in Part 2.

Introduction

Hydrogen damage in steels has been described using various names in the literature including hydrogen embrittlement, hydrogen-induced cracking (HIC), hydrogen-assisted cracking (HAC) and cold cracking. It can occur during fabrication, manufacturing or in service (Ref. 1). The necessary conditions for hydrogen cracking to occur are as follows:

1) Hydrogen is present
2) Tensile stresses act on the weld
3) A susceptible microstructure is present
4) A critical temperature is reached (Ref. 1).

Some hydrogen is usually present as a result of moisture or other sources that can be decomposed in the welding arc. Tensile stresses are also inevitable due to thermal contraction or inherent stresses in the material. The heat-affected zone (HAZ) of a weldment is normally the most susceptible to cracking due to the transformations in microstructure that occur in this region. In steels of higher alloy content, cracking can also occur in the weld metal itself. The temperature plays an important role in HAC; cracking usually occurs at ambient temperatures and is unlikely above 150°C (Ref. 1).

Hydrogen-assisted cracking is an increasing concern in welded higher strength steel structures. Newer alloys with higher strength levels are more susceptible to cracking at lower hydrogen concentrations (Ref. 2). In addition, control of hydrogen in the weld deposit does not guarantee a safe weld; transport by diffusion may result in much higher localized concentrations. This nonuniform distribution of hydrogen can lead to cracking even at low nominal diffusible hydrogen contents. As the strength of welded steels increases, the determination of hydrogen distribution becomes a more critical issue.

KEY WORDS

Weld Cracking
Hydrogen Cracking
Diffusible Hydrogen
Laser Ablation
Deuterium
Heat-Affected Zone (HAZ)
Hydrogen-Induced Cracking (HIC)

Nonuniform Distribution in Welds

The nonuniformity of hydrogen content can be attributed to differences between the weld and base metal microstructures (Ref. 3) and to strain gradients associated with the weld interface (Ref. 4). During the weld cooling process, austenitic decomposition may take place at different temperatures in the weld metal relative to the heat-affected zone (HAZ) of the base metal. The diffusion of hydrogen in austenite is orders of magnitude slower and the solubility of hydrogen is much higher than in martensite/ferrite (Ref. 5). The relative amounts of hydrogen in the weld metal and the heat-affected zone are, therefore, a func-

R. D. SMITH II is with DCH Technology, Valencia, Calif. G. P. LANDIS is with USGS Isotope Geology Laboratory, Denver, Colo. I. MAROEF, D. L. OLSON and T. R. WILDEMAN are with Colorado School of Mines, Center for Welding, Joining and Coatings Research, Golden, Colo.

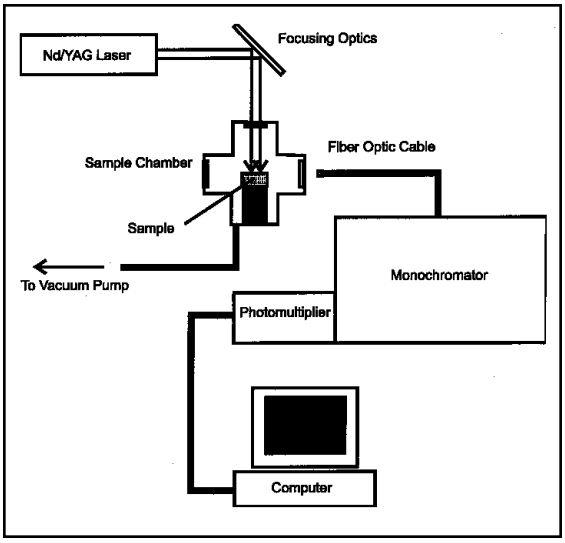

Fig. 1— Schematic of laser-induced breakdown spectroscopy (LIBS) system.

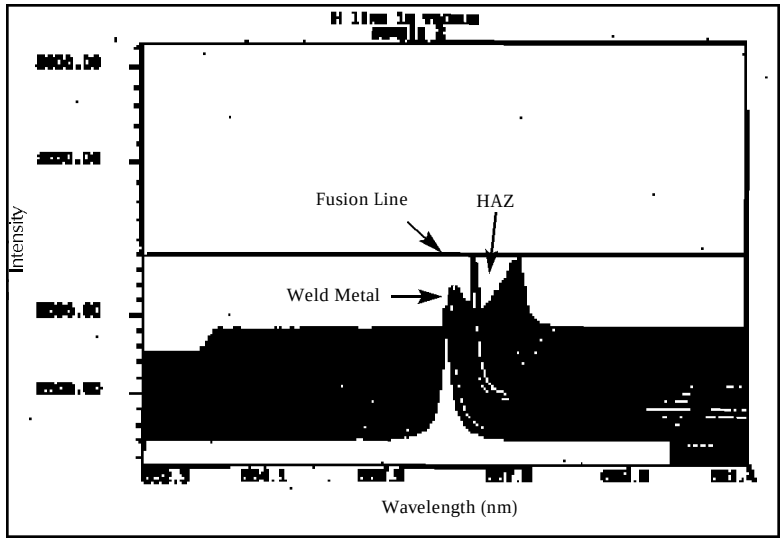

Fig. 2 — Laser-induced breakdown spectroscopy profile of gas metal arc welded HSLA 100 steel (3% H_2/Ar shielding gas).

tion of the compositional differences between the phases and can result in a nonuniform distribution.

The distribution of hydrogen in the two locations (weld metal and HAZ) can be predicted by considering the eutectoidal decomposition temperatures (M_s/F_s — the temperature at which martensitic/ferritic transformation starts during cooling) of the weld deposit and base metal (Ref. 6). The temperature at which this transformation occurs will be different for both locations and two general cases are possible.

In the first case, the weld metal possesses a higher alloying content and a lower M_s/F_s temperature, therefore transformation occurs later. The austenite in the weld metal remains unchanged while the HAZ is transforming. This situation results in retention of hydrogen in the weld deposit and relatively fast transport in the HAZ. The diffusible hydrogen content of the weld metal is thus left higher than that of the heat-affected zone when the weld austenite transforms after the HAZ austenite. The higher hydrogen concentration in the weld metal promotes transverse weld metal cracking.

In the second case, the weld metal possesses a higher M_s/F_s temperature and transforms more quickly. This situation results in hydrogen transport from the weld metal into the HAZ, which is still austenitic and creates a diffusion barrier. This case can result in the localization of diffusible hydrogen adjacent to the weld interface and promote underbead cracking (Ref. 6).

In addition to variations in the overall composition, microstructural heterogeneities such as retained austenite (Ref. 7), inclusions, precipitates or other phases may contribute to nonuniform distributions (Ref. 8). Strain gradients resulting from the weld thermal cycle can also enhance localization of diffusible hydrogen to the weld interface (Ref. 4).

Hydrogen Distributions: Previous Work

Determination of hydrogen distributions in welded steel was first accomplished by Christensen, *et. al.* (Ref. 9). Their results revealed nonuniform distributions in a transverse cross section of the weld deposit and the heat-affected zone. Evans (Ref. 10) investigated diffusible hydrogen distributions along the length of the weld and indicated transient end effects. The distributions became more complex in multiple pass welds because of overlapping thermal cycles.

Tarlinskii, *et. al.*, used a laser ablation technique coupled with mass spectrometric analysis to perform total hydrogen distribution measurements across the cross-sectional weld face (Ref. 11). Their investigation revealed a high localized concentration of hydrogen at the weld interface. Musiyachenko and Kasatkin compared hydrogen distributions before and after heat treatment using the same methods (Ref. 12). They found thermal history and initial hydrogen content profoundly influenced the hydrogen distribution.

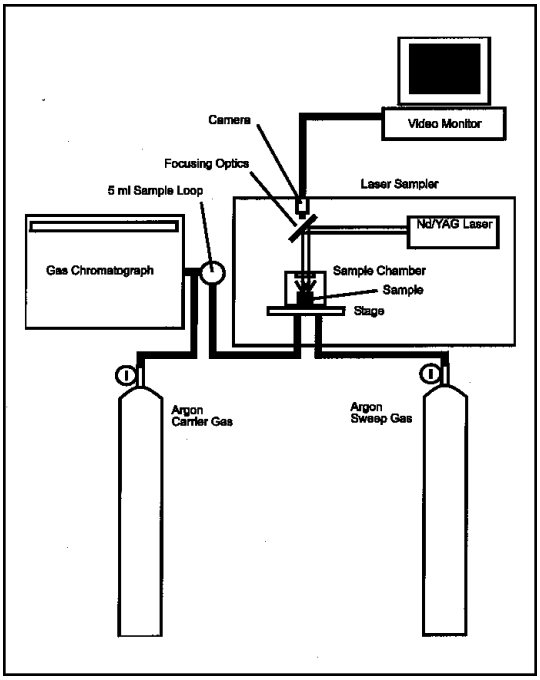

Fig. 3 — Schematic for laser ablation/gas chromatography (LA/GC) system.

Yurioka and Ohshita (Ref. 13) used finite difference analysis to evaluate the influence of both stress concentration and preheat treatment on the hydrogen distribution in steel weldments. Their results suggest a highly localized concentration in the weld toe area and along the weld interface. They also found the hydrogen concentration at the weld toe increased with time after welding and could potentially reach values sufficient to cause cracking.

Current Methods of Hydrogen Measurement

The measurement of weld hydrogen content has become increasingly prominent in the industry. Test specimens are welded, then quenched in a cryogenic liquid (*e.g.*, liquid nitrogen) to prevent loss of hydrogen. The samples are then allowed to release the hydrogen in a controlled environment. Numerous variations of the method exist. A common feature is the collection of evolved gases from the welded sample into a closed container.

In analyzing hydrogen in steels, the distinction is made between total, residual and diffusible hydrogen. Diffusible hydrogen is considered to be mobile at or near room temperature, whereas the remaining residual hydrogen is trapped in the metal. Total hydrogen is the combination of the two fractions. Residual hydrogen can be retained through interaction with microstructural discontinuities (Ref. 14) or by the formation of hydrides with alloying elements. Residual hydrogen is measured by heating the weld to high temperatures (≥ 650°C) in a furnace. Commercial residual hydrogen analyzers are available. For the purposes of predicting hydrogen damage, the diffusible fraction is considered to be of primary importance (Ref. 15).

Current methods for hydrogen analysis in welded steel, therefore, focus on measurement of the diffusible hydrogen content. The standard AWS method is the volumetric displacement of mercury (Ref. 16). The sample is placed in an eudiometer and allowed to evolve hydrogen at temperatures varying from 45 to 150°C. The evolved gas displaces the mercury in the top of the column; the volume is measured by the amount of displacement. Results are reported as milliliters of hydrogen per 100 g of deposited weld metal, or fused metal, if no filler metal is used (Ref. 16).

Other liquids, including glycerin and silicone oil, have been used for the test but have proven unsatisfactory. Glycerin, in particular, has been shown to cause low results due to the increased solubility of hydrogen in this liquid. Samples of evolved gases from tests using glycerin have also been shown to contain constituents other than hydrogen (Refs. 17, 18). The buoyancy in glycerin is also very different from that of mercury since small hydrogen bubbles have more difficulty rising and agglomerating in this liquid. The use of mercury is therefore preferred (Ref. 19). A significant drawback is the required analysis time. The test is time intensive, taking up to 72 h to complete or up to 20 days for the IIW method (Ref. 20). The extended analysis times at room temperature are preferred to heating the sample due to the high vapor pressure and toxicity of mercury. Sample temperatures above 100°C are not recommended because of the possibility of releasing residual hydrogen (Ref. 21), although the 150°C test temperature is widely used without difficulty.

A more modern method utilizing gas chromatography is also in use (Refs. 16, 22). Welded samples are placed in sealed containers and baked to release diffusible hydrogen. The evolved gases are transferred to a gas chromatograph. The gases are then separated with a packed molecular sieve column and analyzed with a thermal conductivity detector (TCD). The analysis (including sample preparation) takes up to 24 h. The gas chromatography method gives comparable results to measurements in mercury. The health hazards associated with mercury have contributed to the increased use of gas chromatography for diffusible hydrogen analysis (Ref. 19).

The purpose of this project was to conduct preliminary investigations of various methods as candidates for hydrogen analysis in welded steel, and the detailed investigation of one selected method for the possibility of field use. The laser ablation methods investigated were laser-induced breakdown spectroscopy (LIBS), laser ablation/gas chromatography (LA/GC) and laser ablation/mass spectrometry (LA/MS). The results are detailed in the following paragraphs. For each of these methods, ASTM A36 and/or HSLA 100 (high-strength, low-alloy) steels were evaluated. The compositions of these steels and the welding parameters used in this study are presented in Table 1.

Table 1 — Composition of Steels and Welding Parameters Used

Element	HSLA 100	ASTM A36
C	0.055	0.051
S	0.012	0.015
P	0.008	0.008
Si	0.31	0.25
Cr	0.06	0.04
Ni	1.59	0.04
Mn	1.96	0.66
Cu	0.62	0.05
Mo	0.45	<0.01
Nb	0.026	<0.01
Ti	0.005	<0.01
Al	0.024	0.01
V	0.007	<0.01
B	0.0008	<0.0005
W	0.014	<0.01
Fe	Base	Base
Pb	0.01	<0.01

Equipment used: Hobart Arcmaster 500/HMC 410 Controller; GMA heat input: 1.5 kJ/mm, 29 V, 440 A
Travel speed: 8.5 mm/s
Single bead on plate
Welding consumable: 1/16 in. (1.6 mm) low-carbon steel, metal-cored welding wire (baked in a vacuum furnace at 650 C for 1 h and stored at 150°C until use)

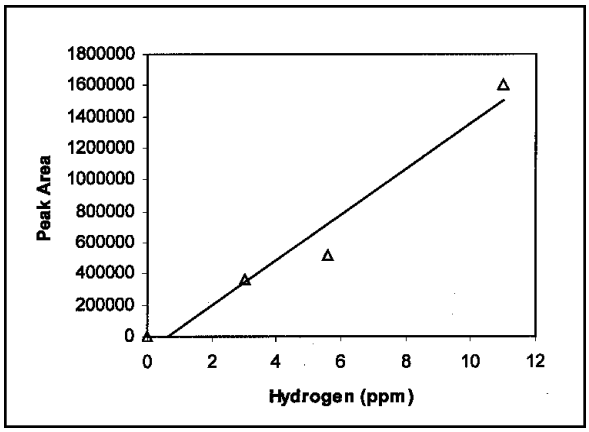

Fig. 4 — Hydrogen calibration curve (in ppm H/Fe) for laser ablation/gas chromatography (LA/GC) using electrolytically charged standards.

Laser-Induced Breakdown Spectroscopy

Welded steel specimens were transported to Los Alamos National Laboratory to evaluate the technique of laser-induced breakdown spectroscopy (LIBS) for the determination of total hydrogen. The specimens were analyzed and a hydrogen emission line at 656.2 nm was

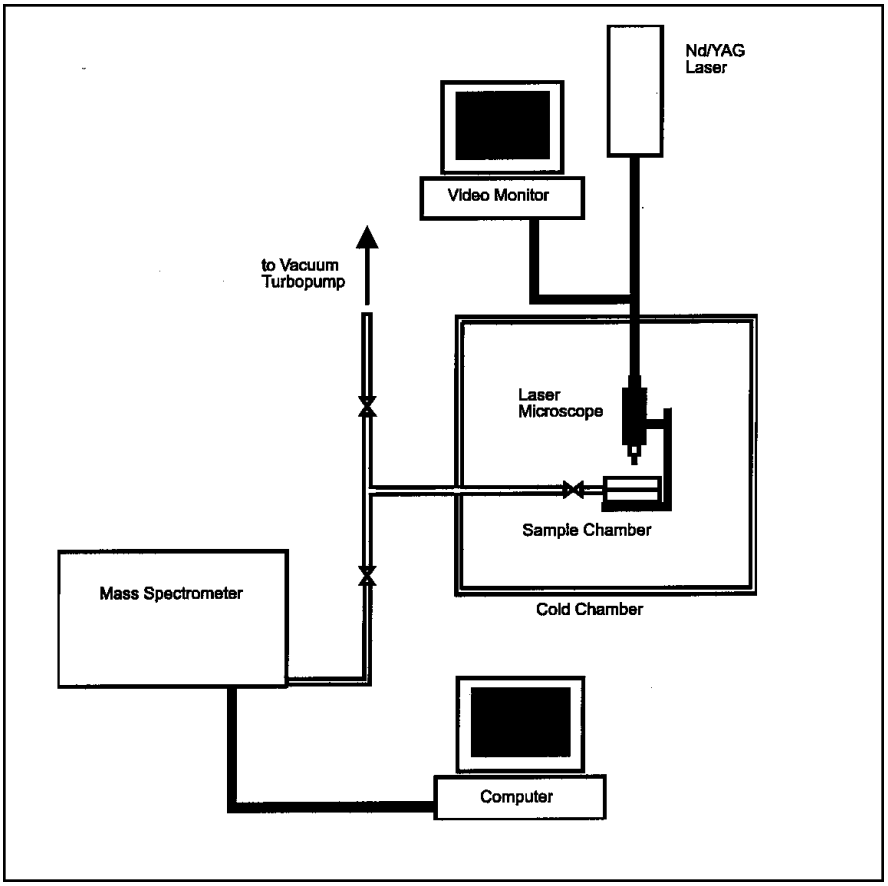

Fig. 5 — Schematic of laser ablation/mass spectrometry (LA/MS) system.

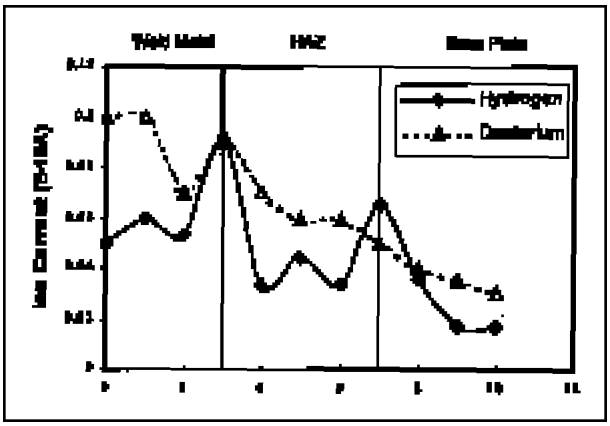

Fig. 6 — Laser ablation/mass spectrometry (LA/MS) hydrogen/deuterium distribution profiles for gas metal arc welded HSLA 100 steel (0.5% D_2/Ar shielding gas).

observed. A sharp increase in hydrogen was detected at the interface between the weld metal and the steel heat-affected zone (HAZ).

The apparatus for laser-induced breakdown spectroscopy (LIBS) has been described in detail elsewhere (Refs. 23, 24). A schematic of LIBS is presented in Fig. 1. The method uses a Nd/YAG laser to ablate the sample surface. The excited atoms in the laser plasma emit light of characteristic wavelengths. The emitted light is captured with a fiber-optic cable and analyzed by emission spectroscopy. The technique of LIBS has been used for elemental determinations in alloys (Ref. 25) and iron ores (Refs. 26, 27).

LIBS Experimental

The specimens consisted of welded HSLA 100 (high-strength low-alloy) steel with dimensions 25 x 25 x 12.5 mm. The specimens were baked in a vacuum furnace at 650°C for one hour before welding. The specimens were then gas metal arc welded (GMAW) using 3% H_2/argon shielding gas, quenched in ice water, then stored at –78°C in a Dewar flask containing a dry ice/acetone mixture until analysis.

The specimens were subsequently introduced into a vacuum chamber equipped with a rotating stage. The chamber was evacuated and each specimen was manually rotated during ablation to access the different areas of the weld. The emission line at 656.2 nm exhibited a strong signal for hydrogen and was used for the analysis. The specimens were preablated prior to analysis to assist in removal of surface contamination. The ablation spots were approximately 1 mm in diameter with 1mm spacing. Each specimen was ablated across the weld face and 25 spectra were obtained. A distribution profile was then assembled using the Galactic Software *GRAMS 32* package.

LIBS Results and Discussion

The LIBS profile for a gas metal arc welded specimen is presented in Fig. 2. The profile displays a spike in the region adjacent to the weld deposit, suggesting a high localized hydrogen concentration at the weld interface.

The LIBS technique was successful in generating qualitative hydrogen distribution profiles in welded steel. However, quantitative reproducibility of the measurements was not satisfactory to establish an analytical practice for determining hydrogen distributions. It was, therefore, decided to investigate alternate methods of hydrogen detection while continuing the use of laser sampling.

Laser Ablation/Gas Chromatography

Combining laser ablation (LA) with gas chromatography (GC) allowed for another analytical arrangement to measure hydrogen content and distribution. The use of gas chromatography has already been accepted in the standard method for measuring diffusible hydrogen (Ref. 16). This arrangement was originally used to analyze ore samples with an inductively coupled plasma spectrometer. The technique has been investigated previously (Refs. 28, 29) for elemental analysis. A variation has been used to detect gases from metals and ceramics (Ref. 30).

The schematic for the LA/GC apparatus is presented in Fig. 3. A laser sampler is interfaced to the column of a gas chromatograph (GC). The sample surface is ablated with a laser. The evolved gases are swept into the GC using a stream of argon, which also serves as the carrier gas. The gases are separated in the column and analyzed with a thermal conductivity detector (TCD).

LA/GC Experimental

The apparatus consisted of a Nd/YAG laser sampler with a glass sample cell. The sampler was interfaced to a gas

chromatograph with a 5-mL sample loop. The GC was equipped with a 6.1-m packed molecular sieve column and TCD detector. The argon carrier gas flow was set at 22 mL/min, the oven temperature at 50°C and the detector temperature at 200°C. The sample chamber was modified with a Teflon valve to control the flow of sweep gas and connected to a separate argon cylinder.

The specimens were gas metal arc welded HSLA 100 steel with levels of 0.5, 1.0 and 3.0% hydrogen in argon shielding gas. The specimens were baked in a vacuum furnace at 650°C for one hour before welding. They were quenched in ice water after welding and stored in dry ice/acetone (–78°C) until analysis. Standardization was performed using electrolytically charged specimens. The standards were prewelded then baked in a vacuum furnace at 650°C for one hour. The standards were then charged to three different levels of hydrogen content, calculated in ppm H/Fe. The hydrogen was introduced by immersing the steel in a 1 N H_2SO_4 solution containing 250-mg/L As_2O_3 and applying a current density of 20 mA/cm^2 for an appropriate time period. The standards were subsequently stored and analyzed in the same manner as the samples.

LA/GC Results and Discussion

The results of the standardization are presented in Fig. 4. The correlation for the standard curve was r = 0.960. Each specimen was first preablated to remove surface contamination, then analyzed in three different areas of the weld: the base metal, the heat-affected zone (HAZ) and the weld metal. The results of the sample set are presented in Table 2. During the analysis the hydrogen signal due to decomposition of absorbed acetone in the high-temperature laser plasma was found to be up to twenty times higher than that due to weld hydrogen, despite the preablation step. A blank subtraction was, therefore, performed by analyzing an unwelded specimen of HSLA 100 steel immersed in dry ice/acetone and subtracting the result from subsequent analyses.

Although LA/GC was successful in quantitative differentiation of hydrogen levels in different areas of the weld, resolution was poor due to the long ablation times required to produce a detectable signal. Sensitivity could be improved by using a different detector, such as a pulsed discharge ionization detector (PDD) with helium, instead of argon, carrier gas. A smaller, customized sample chamber for maintaining samples at cryogenic temperature could also be incorporated. These improvements would undoubtedly increase the sensitivity of the method and possibly justify its use for total hydrogen determination.

Laser Ablation/Mass Spectrometry

The principle of laser ablation was applied to the analysis of welded steels by the use of a mass spectrometer as detector. This technique has been used previously (Refs. 31–37) on various materials, including steel and titanium. Welded steel samples were ablated under high vacuum ($1x10^{-8}$ torr) with a laser. The resulting gases were then transferred to a quadrupole mass spectrometer that was optimized for hydrogen determination.

For these experiments, the samples were welded with deuterium gas in place of hydrogen. The use of tritium as a tracer in metals has been previously documented in radiography studies (Ref. 38). The relative abundance of hydrogen to deuterium is approximately 8000:1. The deuterium, therefore, acts as an ideal tracer and minimizes signals from other contamination sources. Normally, the separate detection of deuterium is difficult, but a mass spectrometer optimized for trace analysis of hydrogen can distinguish between the two hydrogen isotopes.

A schematic of the LA/MS system is presented in Fig. 5. A custom-made vacuum chamber was constructed and mounted to the stage of a laser microscope. The chamber and microscope were located in a refrigerated cold room maintained at –32°C. The sample chamber could be viewed outside the cold room by means of a digital camera and the stage moved by remote control. The energy from a Nd/YAG laser was directed onto the sample surface using fiber-optic cable. The evolved gases were transported directly into the sealed ion source chamber of a quadrupole mass spectrometer through 1.6-mm stainless steel capillary tubing.

LA/MS Experimental

The specimens were each introduced into the vacuum chamber, which was equipped with a quartz window. The chamber was pumped to a pressure of $1x10^{-8}$ torr, at which time the valve to the quadrupole chamber was opened. The main vacuum valve was used as a split since the high signal, due to both hydrogen and deuterium, would saturate the detector. The specimens were moved by means of the mechanical stage. Ablations were performed at a maximum laser power of 18 W with an ablation time of 40 s for each spot. The ablation spots were spaced at 1-mm intervals and were approximately 0.1 mm in diameter as viewed with an optical microscope.

Two types of specimens were analyzed. The first set consisted of HSLA 100 steel welded with low-carbon steel wire. The second set was ASTM A36 steel welded with 910 MPa high-strength steel

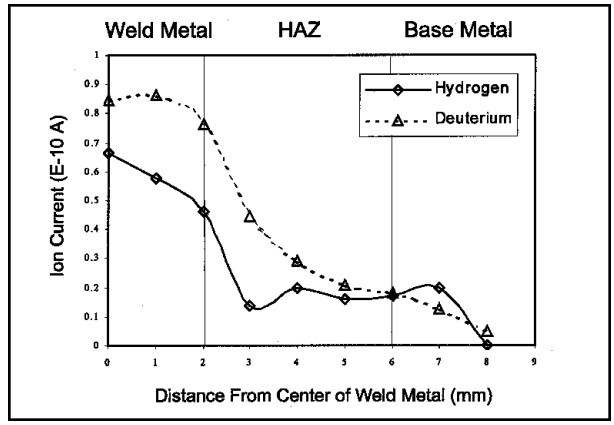

Fig. 7 — Laser ablation/mass spectrometry (LA/MS) hydrogen/deuterium distribution profiles for sample M4 — gas metal arc-welded ASTM A36 steel (0.5% D_2/Ar shielding gas).

Table 2 — Laser Ablation/Gas Chromatography (LA/GC) Data for Gas Metal Arc Welded HSLA 100 Steel Samples

Specimen	Shielding Gas (%H_2/Ar)	Area	Concentration (ppm)
1	0.5	Weld	4.3
1	0.5	HAZ	3.3
1	0.5	Base	2.4
2	0.5	Weld	5.3
2	0.5	HAZ	4.8
2	0.5	Base	4.3
3	1.0	Weld	5.6
3	1.0	HAZ	5.7
3	1.0	Base	3.9
4	1.0	Weld	7.1
4	1.0	HAZ	6.8
4	1.0	Base	5.9
5	3.0	Weld	4.3
5	3.0	HAZ	7.0
5	3.0	Base	4.2
6	3.0	Weld	2.3
6	3.0	HAZ	7.3
6	3.0	Base	5.2

wire. This procedure should produce a difference in the hydrogen distribution between the specimens since the austenitic decomposition in the weld metal and heat-affected zone occur at different times upon cooling.

The specimens were cut into 12.7-mm-thick sections to fit into the sample chamber. All specimens were gas metal arc welded (GMAW) with 0.5% D_2/argon shielding gas and quenched in ice water. These specimens were not baked prior to welding, nor were they preablated prior to analysis. The specimens were subsequently placed in a dry ice/acetone slush at –78°C, broken apart with a hammer and stored in liquid nitrogen (–196°C) until they were analyzed.

LA/MS Results and Discussion

The results of the first analysis are presented in Fig. 6 for GMA-welded HSLA 100 steel with 0.5% D_2/Ar shielding gas. The data points were collected into a deuterium distribution profile of signal as a function of distance from the weld center. The signal in the region of the weld metal is elevated. There is also a characteristic spike directly at the weld interface comparable in intensity to that in the weld metal itself. The signal again drops off in the region of the base plate. The profile for the GMA-welded ASTM A36 steel specimen is presented in Fig. 7. The deuterium has clearly been retained in the weld metal, whereas the signal drops off sharply into the heat-affected zone. These profiles indicate the possible effect of austenitic decomposition, *i.e.*, the martensite start temperature, on the hydrogen distribution. The HSLA steel welded with low-carbon steel wire shows hydrogen transport occurring out of the weld due to the lower M_s temperature of the surrounding base metal. The ASTM A36 steel sample shows the reverse effect, with the deuterium retained in the weld deposit and without the normally observed accumulation at the weld interface.

The hydrogen signal was also collected into a distribution profile for each specimen. The observed profiles are assumed to be caused by decomposition of absorbed acetone and other contaminants on the specimen surface combined with hydrogen generated in the welding arc due to moisture.

The LA/MS technique was successful in generating qualitative hydrogen distribution profiles from welded steel. The data are consistent with the transformation theory of nonuniform distribution in welded high-strength steels. The profiles imply the compositional differences of the weld metal and base metal profoundly influence the final hydrogen distribution in the sample. The use of deuterium as a tracer assures that the signal is coming from the weld metal only and not from any other source. Of the methods investigated, LA/MS is the most promising for the determination of total hydrogen distribution in welded steels.

Conclusions

The use of laser energy for determination of total hydrogen distribution in welded steel was investigated using various detection methods. Ablation of material from the weld surface allowed determination of hydrogen levels in different areas of the weld face. The small amounts of material removed necessitated the use of a sensitive detector. The presence of organic material on the specimen surfaces posed problems due to decomposition and hydrogen formation from the contaminants in the high-temperature laser plasma. For these reasons mass spectrometry was most suitable as a detection technique. The high sensitivity of the instrument and its ability to distinguish between isotopes led to the use of deuterium gas as a hydrogen tracer, which minimized signals from sources other than the weld. Further research will likely produce a useful laboratory method for quantitative determination of total hydrogen distributions. Based on these findings the following conclusions can be drawn:

1) Laser ablation/mass spectrometry (LA/MS) was determined to be the most suitable of the laser ablation methods investigated for analysis of total hydrogen distributions in welded high-strength steels.

2) The use of shielding gas containing deuterium for welded samples analyzed with LA/MS allowed for a better understanding of the role of surface contamination.

3) Qualitative profiles generated using LA/MS are consistent with the theory of nonuniform hydrogen distributions in welded steel as a function of differences in microstructural transformation.

Acknowledgments

The authors wish to thank the Los Alamos National Laboratory, Los Alamos, N.Mex., and the USGS Isotope Geology Laboratory, Denver, Colo., for the use of their facilities. The authors also acknowledge and appreciate the support of the United States Army Research Office.

References

1. Bailey, N., Coe, F. R., Gooch, T. G., Hart, P. H. M., Jenkins, H., and Pargeter, R. J. 1992. *Welding Steels Without Hydrogen Cracking*. ASM International, Materials Park, Ohio, pp. 1–5.

2. Wong, R., Blackburn, J., DeLoach, J., and DeNale, R. 1996. Hydrogen management in steel weldments. DSTO/WTIA Joint Seminar. Melbourne, Victoria, Australia, pp. 35–48.

3. Olson, D. L., Maroef, I., Lensing, C., Smith, R. D., Wang, W. W., Liu, S., Wildeman, T., and Eberhart, M. 1996. Hydrogen management in steel weldments. DSTO/WTIA Joint Seminar. Melbourne, Victoria, Australia, pp. 1–19.

4. Yurioka, N., and Suzuki, H. 1990. Hydrogen-assisted cracking in C-Mn and low-alloy steel weldments. *Inter. Mat. Rev.* 35(4): 217–249.

5. Boellinghaus, T., Hoffmeister, H., and Dangeleit, A. 1995. A scatterband for hydrogen diffusion coefficients in microalloyed and low-carbon structural steels. *Welding in the World* 35(2): 83–96.

6. Wang, W. W., Wong, R., Liu, S., and Olson, D. L. 1995. Welding and weld automation in shipbuilding. TMS Symposium, pp. 17–31.

7. Park, Y. D., Landau, A., Edwards, G. R., and Olson, D. L. 1999. The role of retained austenite in the hydrogen management of high-strength steel welds. *Proceedings of the International Conference on Trends in Welding Research*. ASM International, Materials Park, Ohio, pp. 1–15.

8. Kronshtal, O. V., and Kharin, V. S. 1993. Effect of heterogeneity of materials and heat cycles on diffusion of hydrogen as a factor of the risk of development of hydrogen degradation of metals. *Soviet Mat. Sci.* 28(6): 475–486.

9. Christensen, N., Gjermundsen, I., and Rose, R. 1958. Hydrogen in Mild Steel Weld Deposits. *Brit. Weld.* J., pp. 272-281.

10. Evans, G. M. 1977. Hydrogen in weld metal. *Schweissmitteilungen*. Oerlikon Report, p. 4.

11. Tarlinskii, V. D., Sbarskaya, N. P., Laufer, R. L., Yavoiskii, V. I., Kosterev, L. B., and Afanas'ev, M. I. 1974. Distribution of hydrogen during the manual arc welding of increased strength tube steels. *Automatic Welding* 27 (6): 16–20.

12. Musiyachenko, V. F., and Kasatkin, S. B. 1985. The distribution of hydrogen in welded joints in alloy steel and its effect on the formation of cold cracks. *Automatic Welding* 9: 5–9.

13. Yurioka, N., and Ohshita, S. 1980. An analysis of effect of microstructure, strain and stress on hydrogen accumulation in the HAZ. IIW Doc. IX-1161-80.

14. Otsubo, Syunsuke, and Hideshi. 1986. Thermal analysis of hydrogen in steel. IIW Doc. II-A-680-861993

15. Interrante, C. G., and Stout, R. D. 1964. Delayed cracking in steel weldments. *Welding Journal* 43(4): 145-s to 160-s.

16. American Welding Society. 1993. *Standard Methods for Determination of Diffusible Hydrogen Content*, ANSI/AWS A4.3-93. AWS, Miami, Fla.

17. Quintana, M. A. 1984. A critical evaluation of the glycerin test. *Welding Journal* 63(5): 141-s to 149-s.

18. Kotecki, D. J., and LaFave, R. A. 1985. AWS A5 Committee studies of weld metal dif-

fusible hydrogen. *Welding Journal* 64(3): 31–37.

19. Abreu, L. C., Modenesi, P. J., and Marques, P. V. 1994. A comparative study of techniques to measure diffusible hydrogen content of welds. IIW Doc. II-A-908.

20. British Standards Institution. 1988. *Primary Method for the Determination of Diffusible Hydrogen in Manual Metal Arc Ferritic Steel Weld Metal*. BS 6693.

21. Coe, F. R. 1986. Hydrogen measurements: current trends vs. forgotten facts. *Metal Construction* 18(1): 20–25.

22. Quintana, M. A., and Dannecker, J. R. 1988. Diffusible hydrogen testing by gas chromatography. *Hydrogen Embrittlement: Prevention and Control*, ASTM STP 962. ASTM, Philadelphia, Pa., pp. 247–268.

23. Radziemski, L. J., Loree, T. R., Cremers, D. A., and Hoffman, N. M. 1983. Time resolved laser induced breakdown spectroscopy of aerosols. *Anal. Chem*. 55: 1246–1252.

24. Cremers, D. A., and Radziemski, L. J. 1983. Detection of chlorine and fluorine in air by laser induced breakdown spectroscopy. *Anal. Chem*. 55: 1252–1256.

25. Thiem, T. L., Salter, R. H., Gardener, J. A., and Sneddon, J. 1994. Quantitative simultaneous elemental determinations in alloys using laser induced breakdown spectroscopy (LIBS) in an ultra-high vacuum. *J. Appl. Spec.* 48(1): 58–64.

26. Grant, K. J., Paul, G. L., and O'Neill, J. A. 1990. Time resolved laser induced breakdown spectroscopy of iron ore. *J. Appl. Spec*. 44(10): 1711–1714.

27. Grant, K. J., Paul, G. L., and O'Neill, J. A. 1991. Quantitative elemental analysis of iron ore by laser induced breakdown spectroscopy. *J. Appl. Spec*. 45(4): 701–705.

28. Arrowsmith, P. 1987. Laser ablation of solids for elemental analysis by inductively coupled plasma mass spectrometry. *Anal. Chem* 59: 1437–1444.

29. Cromwell, I. P., and Arrowsmith, P. 1995. Semiquantitative analysis with laser ablation inductively coupled plasma mass spectrometry. *Anal. Chem*. 67: 131–138.

30. Timonina, G. K., and Zuev, B. K. 1991. A local analysis method based on a flowing inert gas for monitoring hydrogen in metals and ceramics. *Zhur. Anal. Khimii* 46(8): 1613–1620.

31. Zuev, B. K., Velyukhanov, V. P., Kulakov, Y. A., Kunin, L. L., and Mikhailova, G. V. 1979. Separate determination of surface and volume content of oxygen and hydrogen in metal films. *Zhur. Anal. Khimii* 34(5): 940–943.

32. Sevast'yanov, V. S., and Zuev, B. K. 1990. Determination of crater volume in laser sampling of materials. *Zhur. Anal. Khimii* 45(2): 260–264.

33. Sevast'yanov, V. S., Zuev, B. K., Babulevich, N. E., and Norikov, N. P. 1990. Special features of generation of hydrogen from Kh18N10T steel in tensile loading. *Fiz. Khim. Mek. Mater.* 26(4): 47–50.

34. Sevast'yanov, V. S., Zuev, B. K.,and Mikhailova, G. V. 1990. Determining hydrogen in titanium surfaces by laser mass spectrometry. *Zhur. Anal. Khimii* 45(11): 2231–2234.

35. Zuev, B. K., Kordonskii, L. I., and Skryabin, I. L. 1990. Local dissolution of solid samples using a laser. *Zhur. Anal. Khimii* 46(7): 1268–1271.

36. Sevast'yanov, V. S., Zuev, B. K., and Mikhailova, G. V. 1991. Determination of hydrogen in stressed materials by laser source mass spectrometry. *Zhur. Anal. Khimii* 46(9): 1747–1753.

37. Zuev, B. K., and Timonina, O. K. 1996. The investigation of hydrogen redistribution under a tensile load. *Hydrogen Effects in Materials.* TMS. Warrendale, Pa., p. 97.

38. Chene, J., and Brass, A. M. 1996. Deuterium and tritium applications to the quantitative study of hydrogen local concentration in metals and related embrittlement. *Hydrogen Effects in Materials*. TMS. Warrendale, Pa., p. 47.

Preparation of Manuscripts for Submission to the *Welding Journal* Research Supplement

All authors should address themselves to the following questions when writing papers for submission to the Welding Research Supplement:

- Why was the work done?
- What was done?
- What was found?
- What is the significance of your results?
- What are your most important conclusions?

With those questions in mind, most authors can logically organize their material along the following lines, using suitable headings and subheadings to divide the paper.

1) **Abstract.** A concise summary of the major elements of the presentation, not exceeding 200 words, to help the reader decide if the information is for him or her.

2) **Introduction.** A short statement giving relevant background, purpose and scope to help orient the reader. Do not duplicate the abstract.

3) **Experimental Procedure, Materials, Equipment.**

4) **Results, Discussion.** The facts or data obtained and their evaluation.

5) **Conclusion.** An evaluation and interpretation of your results. Most often, this is what the readers remember.

6) **Acknowledgment, References and Appendix.**

Keep in mind that proper use of terms, abbreviations and symbols are important considerations in processing a manuscript for publication. For welding terminology, the *Welding Journal* adheres to ANSI/AWS A3.0-94, *Standard Welding Terms and Definitions.*

Papers submitted for consideration in the Welding Research Supplement are required to undergo Peer Review before acceptance for publication. Submit an original and one copy (double-spaced, with 1-in. margins on 8 ½ x 11-in. or A4 paper) of the manuscript. Submit the abstract only on a computer disk. The preferred format is from any Macintosh® word processor on a 3.5-in. double- or high-density disk. Other acceptable formats include ASCII text, Windows™ or DOS. A manuscript submission form should accompany the manuscript.

Tables and figures should be separate from the manuscript copy and only high-quality figures will be published. Figures should be original line art or glossy photos. Special instructions are required if figures are submitted by electronic means. To receive complete instructions and the manuscript submission form, please contact the Peer Review Coordinator, Doreen Kubish, at (305) 443-9353, ext. 275; FAX 305-443-7404; or write to the American Welding Society, 550 NW LeJeune Rd., Miami, FL 33126.