# Complex Rotor Fabrication by Hot Isostatic Pressure Welding

*A sophisticated method of pressure gas welding is used to join complex surfaces of dissimilar metals*

BY G. G. LESSMANN AND W. A. BRYANT

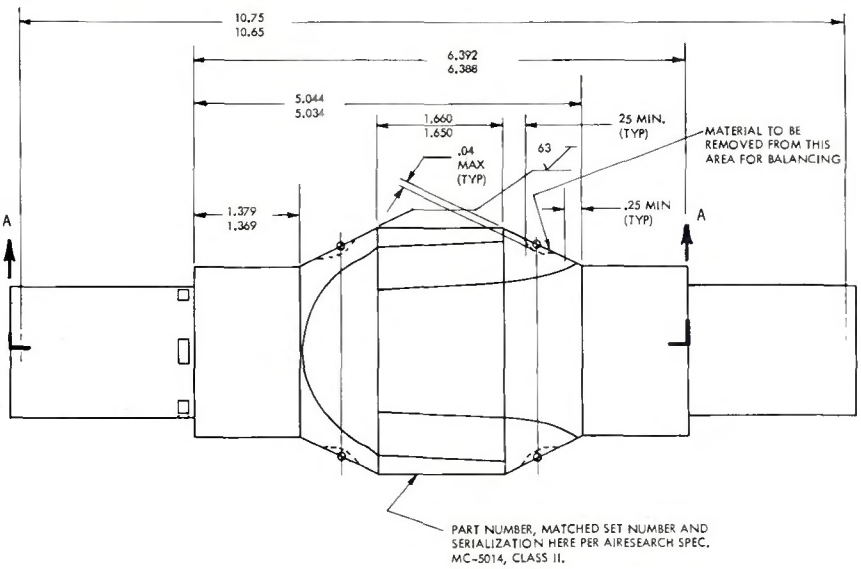


*Fig. 1 — Outline drawing of finish machined rotor. (From AiResearch drawing 69972)*

ABSTRACT. Methods were developed for fabrication of a solid four pole alternator rotor by hot isostatic pressure welding. The rotor blanks welded in this program had complex interface geometries and were of considerable bulk, being approximately 3½ in. in diam and 14 in. long. Magnetic end pieces were machined from AISI 4340 steel while the nonmagnetic central section was of Inconel 718. Excellent welds were produced which were shown to be responsive to post weld heat treatments which substantially improved joint strength. Test specimens of complex geometry were utilized to show that complex surfaces subject to considerable mechanical misfit during processing could be readily joined using hot isostatic pressure (HIP) welding. This demonstrated not only that interface compliance is achieved during welding but that welding pressure is developed in these thick sections sufficient to produce sound joints. Integral weld and heat treatment cycles were developed that permitted the attainment of magnetic properties while minimizing residual stress associated with the allotropic transformation of 4340 steel.

*G. G. LESSMANN is manager, Metal Joining and Processing Research, Westinghouse Research and Development Center. W. A. BRYANT is Senior Engineer Westinghouse Astronuclear Laboratory*

The term hot isostatic pressure welding has been suggested by Moore and Holko[1] and is used throughout this article (instead of pressure gas welding) to define the solid state welding process used in this program. Work reported here was sponsored by NASA, Lewis Research Center, under Contract NAS 3-11837.

## Introduction

Techniques were developed in this program for fabricating an alternator rotor blank by hot isostatic pressure (HIP) welding. In this process a weldment is produced by canning the assembly in a sealed and evacuated container which is then subjected to an external isostatic pressure and elevated temperature. Welding results from the intimate contact between the parts that is achieved when the combination of pressure and temperature is sufficient to overcome mechanical and chemical surface barriers.

The finished rotor outline drawing is shown in Fig. 1. This rotor is de-

signed for use in a turboalternator-compressor unit for a Brayton cycle conversion system. A schematic of this unit is shown in Fig. 2. Its nominal operation at 36,000 rpm provides an output of 6kW at 1200 Hz. The rotor is of the Lundell type. It is fabricated into a solid four pole configuration using double poled end pieces of AISI 4340 steel welded to a complex central section of cast Inconel 718. The rotor blank components are shown prior to HIP welding in Fig. 3. The HIP welded rotor blank with its stainless steel can partially machined off is shown in Fig. 4.

This rotor configuration is ideally suited to fabrication by HIP welding. In comparison with brazing some important advantages are realized. There is a tendency toward poor fit when the components are heated to typical brazing temperatures because of large surface areas. Hence, the joint is difficult to cover with a brazing filler metal which interacts with the base metal. Further, when brazing, the joint must be flooded since it is difficult to maintain gap dimensions to get true capillary action. In this respect good mechanical fit at room temperature is lost when heating to the brazing temperature. Poor fit-up results from the difference in coefficients of thermal expansion, (particularly at the austenite transformation temperature) and is accentuated by the "wedge" configuration of the rotor.

The extent of interface and mechanical mismatch of the joint is not a problem in HIP welding. Mismatch is accommodated by plastic deformation since welding is accomplished at pressures greater than the yield stress of the weakest component. Likewise yielding permits the entire interfacial area to be brought into contact under the influence of the isostatic pressure. Special tests were incorporated into this program to demonstrate the capability of this process to accommodate large mechanical misfit in HIP welding of heavy sections.

## Basic Aspects of HIP Welding

The formation of a weld between two solid bodies by means of hot isostatic pressure welding is accomplished by bringing the surfaces to be joined into intimate contact sufficient to permit metallurgical bonding between the surface atoms. For ideal surfaces (those which are perfectly flat and atomically clean) this intimate contact is readily achieved. However, in order to achieve intimate contact between two nonideal surfaces, several barriers must first be overcome. One barrier is the uneven surface possessed by the materials to be joined. On a microscopic scale these

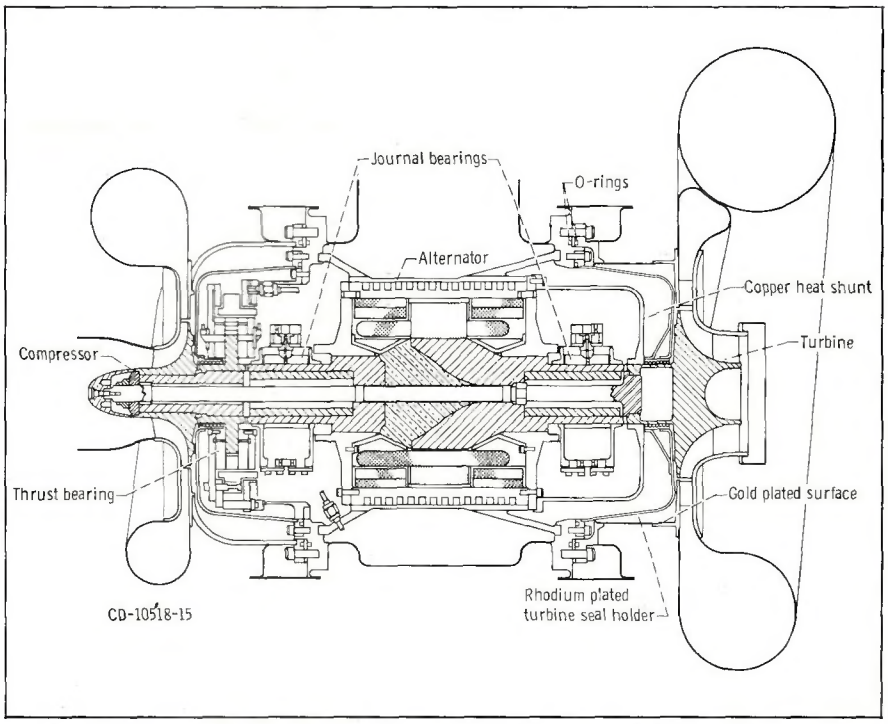


*Fig. 2 — Schematic of 6 kW Brayton Cycle rotating unit. (From NASA Technical Memorandum NASA TM X-1869)*

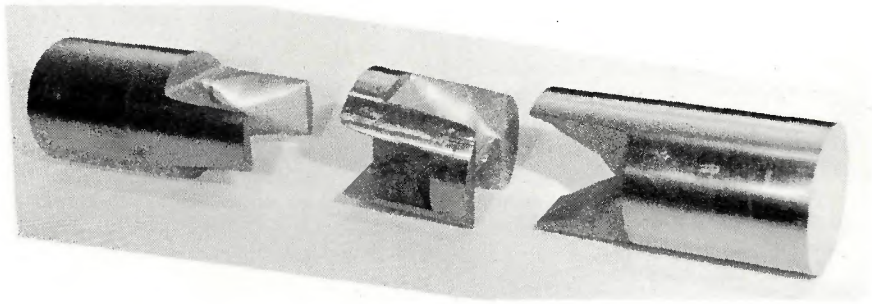

*Fig. 3 — Rotor blank components prior to HIP welding*

*Fig. 4 — HIP welded rotor blank with central section of can machined to expose joint between 4340 steel ends and nonmagnetic Inconel 718 center section*

real surfaces are very rough. For example, the most highly polished surface will still contain peaks of approximately 500 angstroms in height. This condition limits the area of initial contact to only a very small fraction (estimated to be about $10^{-6}$) of the nominal surface area.

The second barrier to welding is surface contamination. A clean metallic surface is almost immediately covered with an oxide film upon exposure to air. This film is typically several hundred angstroms in thickness. This film's formation is unavoidable when the metal is exposed to air since the chemical bonds of the surface atoms of the metal must be satisfied and do so readily by chemisorption of oxygen. In addition, atmospheric gases or solvents can become physically adsorbed on the oxide layer to provide further potential impairment to welding.

To overcome these barriers to welding, consideration must be given to a number of factors. First, movement of material at the interface is necessary to increase contact area beyond its very small initial value. HIP welding generally achieves this by mechanical deformation on a microscopic scale. At applied stresses in excess of the yield stress the required local deformation readily occurs. At pressure and temperature conditions for which the yield point is not surpassed, movement of material can still be accomplished but is dependent on creep or diffusion mechanisms, or both. The primary mechanism in HIP welding is, however, the plastic deformation achieved by exceeding the yield stress of the material. In dissimilar metal joints, only the weaker material need be deformed.

The second barrier in HIP welding, surface contaminant layers, is eliminated by diffusional mechanisms. This is achieved with temperatures and times sufficient to permit dissolution of the surface contaminants into the metal. Generally these temperatures are in excess of 0.5 $T_m$. Mechanical disruption of the surface layer during welding is of decidedly secondary importance since this mechanical working is insufficient to achieve extensive dispersion in the joint area. Hence, the mechanical properties of the surface layer are also of secondary importance in this regard. An effort to minimize this layer is however desirable since its presence hinders welding and represents contamination in the weld area even after dissolution.

In this program extensive precautions were taken and some alternate approaches were tried to minimize contaminant surface layer development. Interestingly, interdiffusion is not essential to HIP welding. This has been demonstrated by the joining of copper to tungsten metals which are essentially insoluble.[2] On the other hand, extensive interdiffusion can be a problem if the reaction zone has undesirable properties. The most common problem with dissimilar materials is the formation of brittle intermetallics. In such circumstances diffusion zone thickness should be minimized and generally maintained at less than 0.0005 in.

## Special Features of Rotor Welding

The material and the peculiar design features of the Lundell rotor received special attention in planning this program and in evaluating results. The major mechanical constraints were the rotor bulk, 3½ in. diam, the high strength of Inconel 718, and joint fit-up. Major metallurgical constraints existed in the form of a stable surface layer associated with Inconel 718 and dimensional changes associated with the allotropic transformation of 4340. This surface layer, while desirable for imparting high temperature oxidation resistance to Inconel 718, represents a chemical obstacle to welding. The use of high welding temperatures was anticipated for dissolution of this layer. These temperatures were expected to be above the 4340 transformation temperature thereby complicating the mechanical aspects of joining in two ways. First, upon heating, dimensional changes would produce mismatch by a "wedge effect" between components. Second, upon cooling, dimensional changes would produce residual stresses in the welded joint. Dilatometer curves for these materials showing the extent of thermal expansion mismatch between these materials are given in Fig. 5.

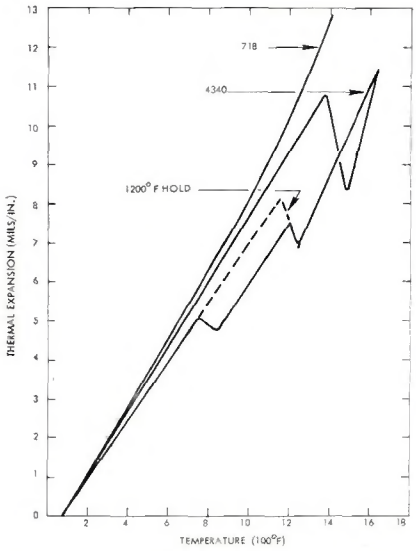


*Fig. 5 — Thermal expansion of Inconel 718 and AISI 4340 steel*

Consideration of these mechanical and chemical constraints led to the selection of special test specimen configurations which incorporated complex surfaces, intentional joint mismatch, and bulk approximating that of the rotor. Reasonably thick test specimens were required to demonstrate that sufficient bulk creep or yielding to accommodate poor fit-up across large sections could be realized. In addition the use of relatively large specimens permits demonstration of the occurrence of sufficient pressure for welding across the entire joint.

For the rotor application a further constraint imposed on the welding is retention, or the ability to recover, magnetic properties of the 4340. Target properties selected were those of a coarse spheroidized structure achieved with an 8 hr isothermal hold at 1165 F following cooling from the austenite range. A similar isothermal treatment was readily incorporated into welding runs providing a bonus in terms of mechanical constraints; i.e., transformation strains could be accommodated in part by creep as $Fe_3C$ spheroidization progressed. Autoclave pressure of about 28,000 psi was maintained during this thermal arrest as a further precaution against distortion.

## Program Objectives

The primary objective of this program was to demonstrate and utilize HIP welding techniques to fabricate two rotor blanks. In achieving this objective, secondary goals were established to permit the logical development of rotor welding parameters.

As-welded rotor specifications were selected primarily to assure optimum magnetic properties. These properties are achieved with the coarse spheroidized 4340 microstructure associated with modest strength. Magnetic properties equivalent to those achieved by an isothermal transformation of 8 hr of 1165± 15 F were selected as standard for this program. The magnetic property requirements dictated the following modest goals for the rotor component properties in the as-welded condition:

| | AISI 4340 | Inconel 718 |
|---|---|---|
| Ret'd austenite | <1.0% | — |
| Min Yield Str. | 50,000 psi | 100,000 psi |
| Min Tensile Str. | 100,000 psi | 100,000 psi |
| Min Elongation | 10% | 5% |

Secondary objectives identified as critical in this application were satisfied during the development phase of this program. These fell into two categories: those required for selection of rotor welding parameters, and second,

those which could demonstrate growth potential for higher speed lighter weight assemblies capable of operation under conditions of greater stress and temperature. To establish the basic rotor welding parameters the following secondary objectives were evaluated:

- Effect of surface preparation including mechanical and chemical cleaning
- Effects of bulk preparation: vacuum degassing of the 4340 prior to welding and use of vacuum melted 4340
- Effect of joint fit-up as demonstrated by accommodation, during welding, of intentional joint mismatch of weld test specimens. Unique specimen configurations were designed for this purpose
- Determine if welding could be accomplished below the $Ae_1$ temperature to avoid introduction of residual stresses caused by expansion of the 4340 during its allotropic transformation from austenite.
- Establish the ability to incorporate the allotropic transformation as an integral portion of high temperature welding cycles while maintaining autoclave pressure to help relieve transformation strains.

An additional series of tests was conducted to establish feasibility of utilizing this process for fabricating higher strength rotors. To demonstrate this possibility post weld heat treatments were evaluated to determine if joint strength would respond to the same heat treatments as normally used for base metal.

## Experimental Procedures

A total of twelve welding runs were made during this program. The latter two runs each contained one rotor and a number of qualification coupons and specimens for destructive evaluation. The rotor runs utilized parameters identified as optimum within the constraints of this program. Runs were evaluated sequentially so that redirection of emphasis occurred as test results accumulated throughout the program. This sequence of changes is not described in this report but rather the essentially definitive techniques and results are presented.

The autoclave utilized in this program had a hot zone diameter of 7½ in. and a uniform temperature length in excess of two feet. Hence, a considerable sample load could be handled in one run. Maximum furnace temperature was 1832 F providing load temperature up to 1750 F. All runs were made at an essentially fixed pressure of 28,000 to 29,000 psi.

To determine the conditions necessary to weld the rotor components, preliminary welding trials were made using different specimen geometries to simulate the various features of rotor components. Simple, flat-faced weld specimens were used to establish baseline data. They provided means for quickly checking the extent and quality of welding since metallographic and bend strength coupons were easily removed from them.

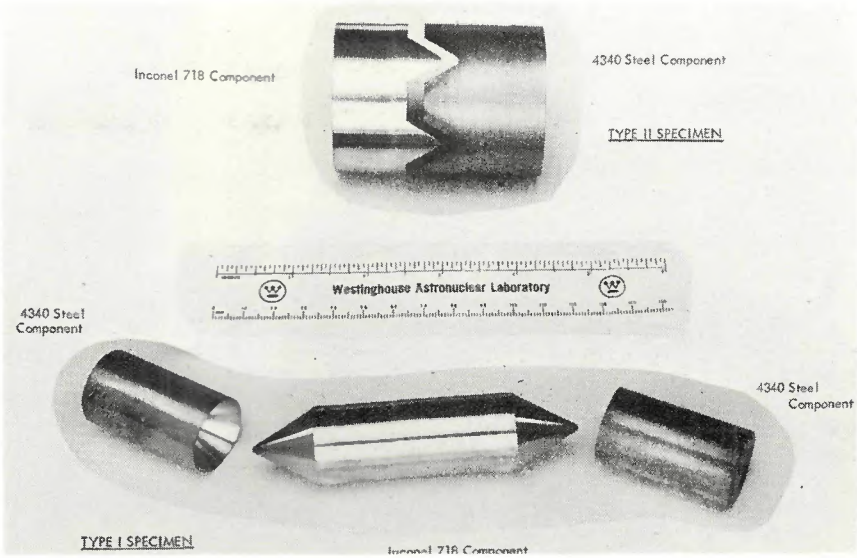


*Fig. 6 — Test specimen configurations for trial welding runs. Plain, flat surface specimens not shown*

The complex geometry of the rotor components was simulated by the weld specimens shown in Fig. 6. These two specimen types were mated with known amounts of mismatch between the joint surfaces of their assembled components. Weld mismatch gaps up to 0.015 in. were utilized. Hence, these specimens simulated the mismatched conditions anticipated in actual rotor welding. Two types of surfaces were provided. Type I specimens were 1 in. in diam and contained two sets of conical interfaces per specimen. Type II specimens had sawtooth configurations, two teeth per specimen, one mismatched at the apex, the other at the base. The Type II specimens are fairly bulky, being 2½ in. in diam. These specimens are inherently self locking in configuration and thus require considerable metal flow to accommodate mismatch during welding.

Stainless steel (304 grade) was used as the canning material. Cans for the weld specimens were comprised of spun end caps tightly fitted into the ends of thin walled tubes. Rotor cans were fabricated by seam welding a longitudinal lap joint in a sheet which had been tightly wrapped about the circumference of the assembled rotor. Weld penetration into the rotor was avoided even though the can was completely welded to the rotor during the HIP weld run. Spun end caps were also used for the rotor cans. A number of uncanned evaluation specimens were included in each autoclave run. These specimens included Rowland rings for the measurement of magnetic permeability and tensile and charpy blanks from which postweld strength properties of the rotor materials could be determined.

Inconel 718, obtained in the hot rolled and annealed condition, was heat treated (overaged) to give it maximum ductility and minimum strength for welding. This treatment consisted of solution treating for 3 hr at 1800-1850 F, furnace cooling to 1450-1500 F and holding for 24 hr followed by furnace cooling to room temperature. Later in the program this anneal was deemed unnecessary since joint compliance is easily achieved by deformation of the 4340. Consequently, the rotor was welded with the 718 in the as-cast condition.

The requirement of high magnetic permeability dictates that the 4340 steel portion of the rotor possess a coarse spheroidized microstructure. Since the preliminary welding trials were planned to be made above the $Ae_3$ temperature, the 4340 steel required no heat treatment but rather was left in the as-received hot rolled and annealed condition. Sufficient spheroidization occurs during the slow autoclave cool down from the bonding temperature to achieve the desired magnetic properties.

A portion of the weld specimens were chemically etched in aqueous acid solutions and thoroughly cleaned. The remaining specimens were cleaned only. The etching procedure was as follows:

- 4340 steel components: 10% HCL

at 100 F for approximately 5 min

- 718 Inconel components: 30% $HNO_3$ + 5% HF for approximately 30 sec

Cleaning consisted of the following operations:

1. Scrub with hot tap water and abrasive type detergent (principal active ingredient is trisodium phosphate)
2. Rinse with hot tap water
3. Rinse with boiling distilled water
4. Spray rinse with grain alcohol
5. Air dry

In addition it was ultimately shown that a vacuum degassing treatment of 24 hr at 1850 F and $10^{-5}$ torr was required for proper preparation of 4340 components. Personnel handling the cleaned components wore prescrubbed pure latex gloves. Direct contact with specimens during storage was made only with Kim wipes or laboratory blotter paper.

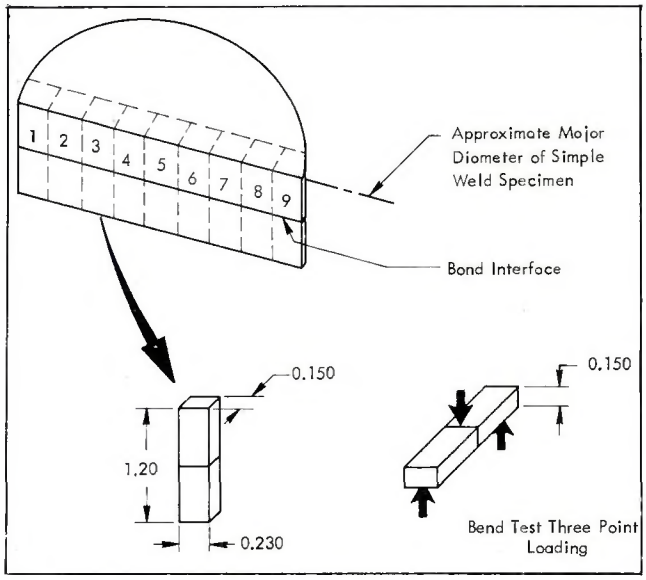


*Fig. 7 — Geometric orientation of bend coupons machined from simple, flat faced weld specimens. View of transverse cut across welded specimen*

Prepared weld specimens and preidentified cans were given an overnight pumpdown in a GTA weld box. The specimens were loaded into the cans following backfilling of the box with ultra pure helium. The helium quality was monitored during can loading and assembly. The lids of the cans were arc welded in place with a small evacuation hole left unwelded. The welded cans were transferred to the EB weld chamber and given a second overnight pumpdown before being seal welded. The sealed cans were leak tested by immersion in methanol following pressurizing at 400-500 psi in a room temperature autoclave.

The sealed cans were affixed with chromel-alumel thermocouples and loaded into a 3¾ in. ID cylindrical copper autoclave fixture. The remaining volume of the fixture was filled with granular alumina as was the autoclave after loading the fixture. Once in the autoclave, baffles were placed above the fixture to minimize the deleterious effect of convection currents on temperature uniformity. The success of this approach is evidenced by the achievement of only a 23 F temperature gradient over the 24 in. stack height at the highest temperature of operation (nominally 1750 F).

Schedules of the parameters for HIP welding are included with the results presented in the next section of this report. All cans were leak checked after autoclaving. Machining was used to remove the cans from the

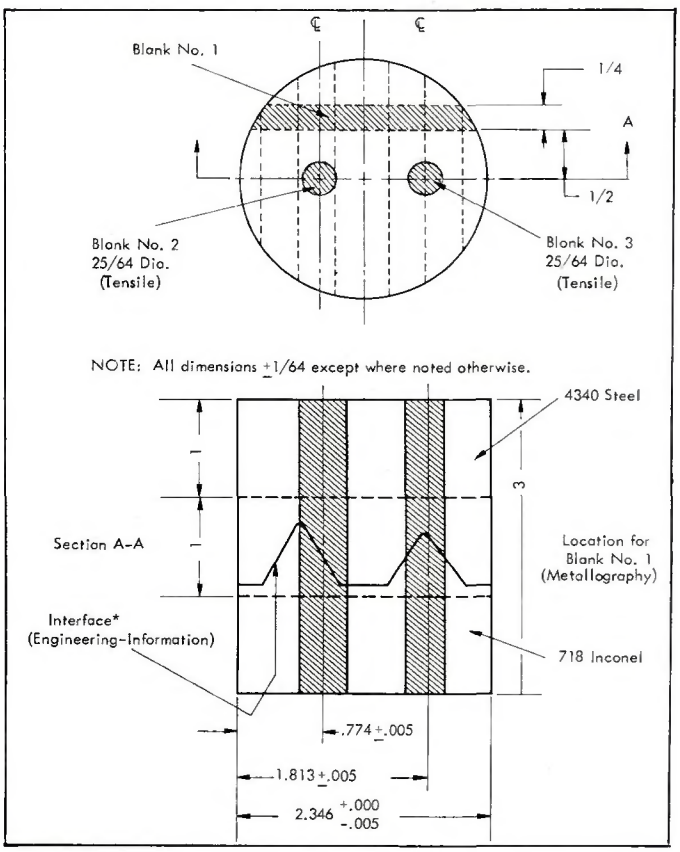


*Fig. 8 — Location of tensile and metallographic blanks machined from Type II mismatch specimens*

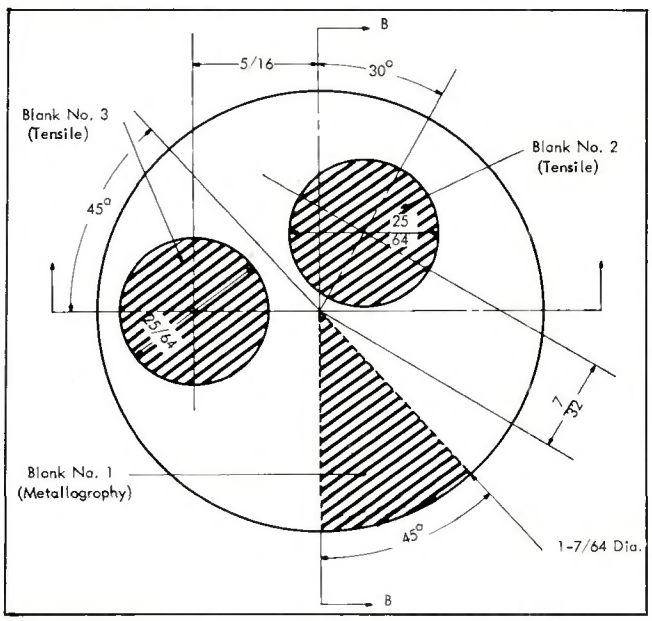


*Fig. 9 — Transverse view showing location of tensile and metallographic specimens removed from Type I mismatch specimen joints*

specimens. Specimens which then passed dye penetrant testing on the exposed interface were satisfactory for further destructive evaluation.

Bend test coupons were machined from the flat-faced specimens. The geometrical relation of a bend coupon to a simple weld specimen is shown in Fig. 7. The coupons were bent with three point loading using a 0.12 in. radius punch applied to the weld interface while the coupon was supported over a ¾ in. span. All testing was performed at ambient temperature and with 1.0 in./min crosshead speed.

Type II weld specimens were machined as shown in Fig. 8 to yield tensile blanks and metallographic specimens. Tensile blanks were then machined into tensile specimens of 0.179 in. gage diam and 2.00 in. gage length. The location of the blanks in the weld specimens was such as to represent preweld interface mismatch gaps of .002 in. for blank No. 2 and .004 in. for blank No. 3. Type I weld specimens were first cut in half lengthwise to yield two separate specimens from which tensile blanks and metallographic specimens were machined according to the layout of Fig. 9. These tensile blanks represented preweld interface mismatch gaps of .009 in. for blank No. 2 and .006 in. for blank No. 3. All tensile tests in this program were run at ambient temperature with a crosshead speed of 0.01 in./min.

Rowland rings were given a dc magnetic test to assure basic compliance with magnetic requirements. For some bonding trials, a determination of Rockwell C hardness was used as a measure of magnetic permeability since both properties are a function of the degree of coarseness of the spheroidized $Fe_3C$ in the steel. The rings were tested using a magnetizing force (H) of from 5 to 200 Oersteds. Values of the induced magnetism (B) were obtained and used to determine the magnetic permeability (B/H). The criterion for magnetic permeability was arbitrarily chosen as that value corresponding to an applied magnetizing force of 100 Oersteds. This value was compared to that found for a standard specimen which had been austenized and then spheroidized for 8 hr at 1165 F. Rockwell C hardnesses were also obtained on each Rowland ring specimen.

## Results and Discussion

### Rotor Welding

Two rotors were successfully HIP welded utilizing parameters which, within the limits of this investigation, were optimized. The HIP weld schedule for these units were as follows:

- Components were prepared for welding by cleaning and etching as described above under Experimental Procedures. In addition, the AISI 4340 pole pieces were vacuum degassed at $10^{-5}$ torr and 1850 F for 24 hr prior to canning
- Welding was accomplished by holding at 1730 + 20 F for 4 hr at 29,000 psi
- An integral spheroidization heat treatment was incorporated during cool down by holding at 1200 F for 12 hr while maintaining 29,000 psi pressure.

The welded rotor blank (with the 304 stainless steel can removed in the weld area) was shown previously in Fig. 4. Dye penetrant inspection showed this joint to be completely sound. In addition, verification specimens were included in the rotor welding run which were destructively evaluated to check the adequacy of the welding cycle. Bend fracture strengths were obtained from these specimens and are presented in Table I. These strengths are comparable with those achieved in experimental HIP welding trials described later in this article.

A photomicrograph taken of the weld interface of one of the specimens is presented in Fig. 10. Excellent interfaces were found for each specimen. Values for the $R_c$ hardness given in Table I are indicative of greater than 96% of the magnetic permeability of the standard magnetic specimen which, with a magnetizing force of 100 Oersteds, attained an induced magnetism of 18.0 kilogauss.

The welding parameters and materials preparation procedures used to successfully bond the rotor components were those found by evaluation of the results of preliminary welding trials to be optimum. The significant results obtained from the evaluation of these preliminary trials are presented in the balance of this discussion. In each case data are shown for nonstandard parameters and compared with corresponding data for the selected standard rotor welding parameters. Minor exceptions to this means of presentation are given where required. By this type of presentation, the basis for selection of parameters is reviewed and the adequacy of this selection is demonstrated.

### Weld Hold Time

The time at which materials to be joined are held at the welding temperature under pressure has no effect on weld strength, at least when the difference in welding time is not great. This is exemplified by a comparison of parameters and weld strength results

**Table 1 — Qualification Bend Test Results for Joints Welded in Same Autoclave Run as Actual Rotors**

| Specimen no. | Associated rotor no. | Average bend strength, psi | Fracture description | $R_c$ of 4340 portion |
|---|---|---|---|---|
| YSC | 1 | 128,500 | ductile, occurs | 12 |
| YSCR | 1 | 128,600 | through | 14 |
| ZSVC | 2 | 119,700 | Inco 718 | 13 |

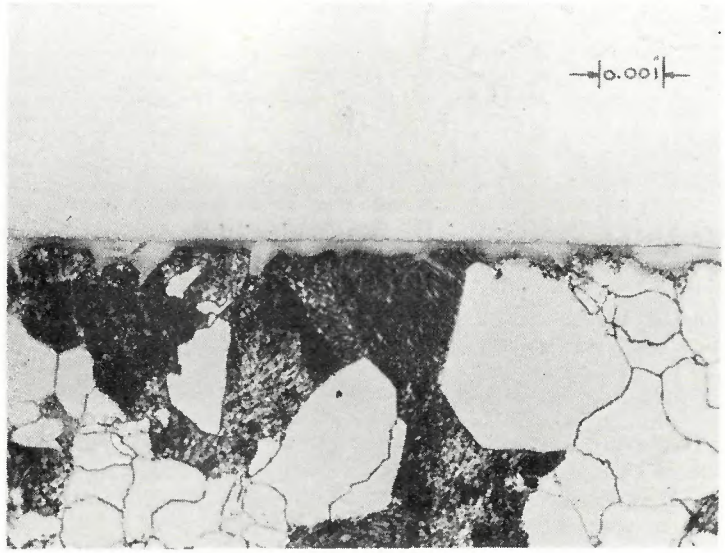


*Fig. 10 — Example of typical sound HIP weld microstructure from verification specimen included in rotor HIP weld runs*

**Table 2 — Effect of Different Hold Times on Weld Tensile Strength**

| Ultimate tensile strength, psi | |
|---|---|
| 6.5 hr hold time | 4.0 hr hold time |
| 84,300 | 98,800 |
| 83,800 | 92,500 |
| 84,700 | 76,000 |
| 100,200 | 75,900 |
| 88,900 | 84,600 |
| 95,100 | 83,800 |
| 76,700 | |
| Avg = 87,700 | Avg = 85,300 |

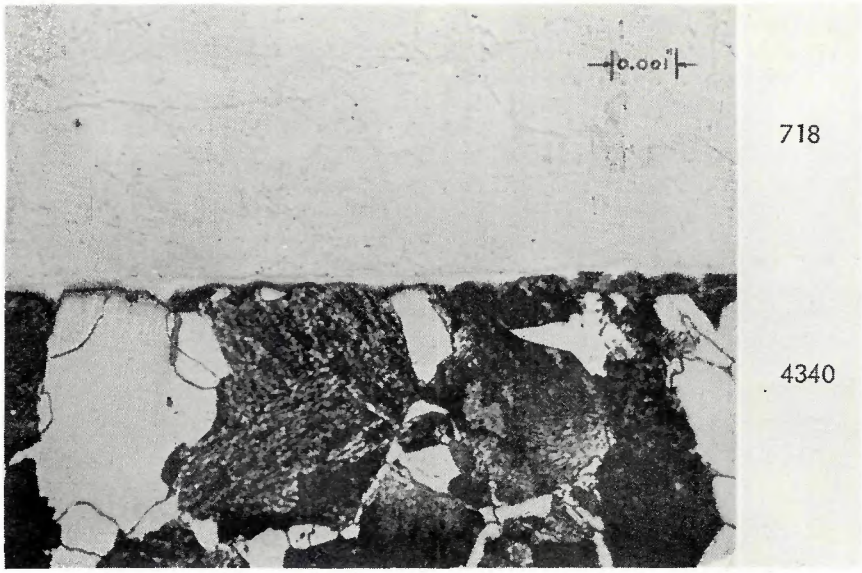


*Fig. 11 — Interface of weld made with outgassed 4340 steel. Note the complete absence of the thinner diffusion region usually associated with bond failure; see Fig. 12*

from two trials in which hold times of 6.5 and 4.0 hr were used.

The tensile strength data from these two trials are given in Table 2. The difference between average joint strength associated with weld times of 6.5 and 4.0 hr is less than the variation in joint strength for each hold time.

These data indicate that times less than four hr are sufficient for the achievement of intimate materials contact and dissolution of any deleterious contaminants. Extending the hold times by 2.5 hr offers no advantage over the 4 hr used in the standard process.

#### Heat Treatments

Two aspects of heat treatment were incorporated in this program. The first, an integral heat treatment to achieve optimum magnetic properties in the 4340 rotor components has been discussed previously. In addition, specimens welded using the standard rotor parameters were subjected to postweld heat treatments to ascertain if joint strength would respond to base metal heat treatments. The results of this feasibility study were quite encouraging as shown in Table 3. The data show that for the limited heat treatments tried, joint strength could be increased by almost 50 percent. Higher specimen strength was realized for a joint oriented at 30 deg to the tensile direction rather than normal to this direction. Hence, joint orientation probably would also have an effect on net section load acceptable for a given design even though slightly different heat treatments were used for the normal versus 30 deg load orientations.

It is also worth noting that the severe thermal shock accompanying oil quenching from temperatures as great as 1525 F had no deleterious effect on weld joint strength.

#### Bulk Preparation

Probably the single most important variable affecting welding performance was outgassing of the 4340 steel. This variable's importance is not so much in its effect on weld strength

**Table 4 — Comparison of Tensile Strengths of Welds Made Under Equivalent Conditions Using Outgassed and Nonoutgassed 4340 Steel**

| Tensile strength of specimen bond, psi | |
|---|---|
| Outgassed 4340 | Nonoutgassed 4340 |
| 75,900 | 71,840 |
| 76,000 | 72,560 |
| 83,800 | 95,400 |
| 84,600 | 98,200 |
| 92,500 | (a) |
| 98,800 | (a) |

(a) Tensile specimens fractured during machining

**Table 3 — Effect of Post Weld Heat Treatment and Joint Orientation on Joint Strength**

| Specimen no. | Heat treatment | Hardness, $R_c$ 718 | Hardness, $R_c$ 4340 | Tensile strength, psi | Comments |
|---|---|---|---|---|---|
| 1 | As-welded | 39 | 12.5 | 82,500 | Joint 90 deg to load, joint fracture |
| 2 | A | 32 | 39 | 118,000 | Joint 90 deg to load, joint fracture |
| 3 | A | 32 | 39 | 120,000 | Joint 90 deg to load, joint fracture |
| 4 | B | 35 | 33 | 110,700 | Joint 90 deg to load, joint fracture |
| 5 | B | 35 | 33 | 115,000 | Joint 90 deg to load, joint fracture |
| 6 | B | — | — | 114,800 | Joint 90 deg to load, joint fracture |
| 7 | C | 35 | 40 | 120,500 | Joint 90 deg to load, joint fracture |
| 8 | A | — | 39 | 154,000 | Base metal specimen |
| 9 | A | 34 | | 165,500 | Base metal specimen |
| 10 | D | 35 | 42 | 141,800 | Joint 30 deg to load, mixed fracture |
| 11 | D | 35 | 42 | 139,200 | Joint 30 deg to load, mixed fracture |

Heat treatments:
A 30 min at 1525 F, O.Q., temper at 950 F 2 hr, air cool
B 30 min at 1425 F, F.C. to 700 F, hold 2 hr, air cool
C 1 hr at 1750 F, A.C. to R.T., 1425 F for 6 hr, O.Q., Temper 800 F for 4 hr, air cool
D 6 hr at 1425 F, O.Q., temper at 800 F 4 hr, air cool


*Fig. 12 — Interface of weld made with nonoutgassed 4340 steel. Weld failure has occurred through the thinner region of the interdiffusion zone*

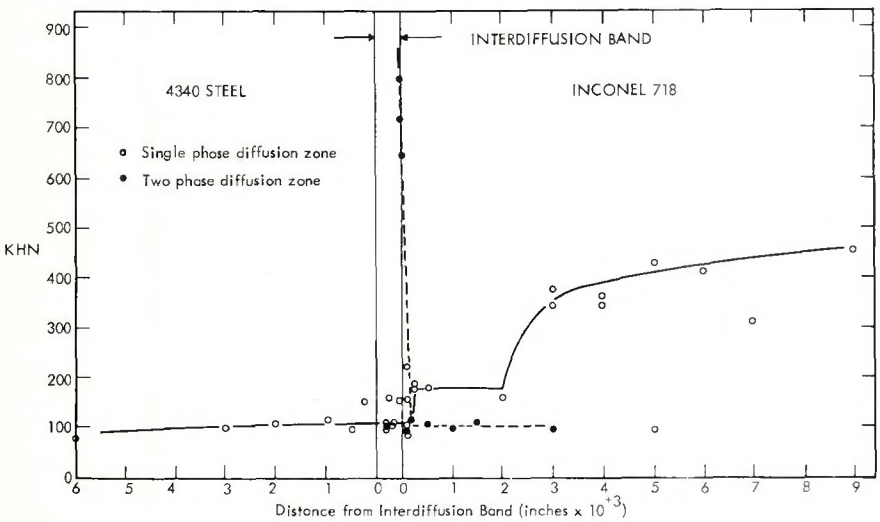


*Fig. 13 — Results of microhardness traverses of weld specimen interdiffusion zones*

level but rather in its relation to consistency of attainable weld strength. This point is illustrated by a comparison of tensile strengths of specimens containing outgassed and nonoutgassed steel components (Table 4). Data associated with preweld surfaces that were cleaned and etched and those that were merely cleaned are included since, as shown in a subsequent portion of this discussion, these two methods of surface preparation are equivalent in their effect on bonding. The remaining welding conditions were those used on the rotors except that some specimens had an integral isothermal treatment of 10 hr at 1100 F instead of the standard treatment of 12 hr at 1200 F.

Weld interface failure occurred during the machining of tensile specimens from two of the nonoutgassed specimens indicating that very low, as well as very high, joint strengths are associated with the 718 to 4340 bonds when the latter is not outgassed.

The contribution of outgassing is further demonstrated by a comparison of Fig. 11 and 12 showing interface microstructures of welds made with and without this process step respectively. Welding has been achieved with the nonoutgassed material, but cracking has occurred on the Inconel side of the interdiffusion zone. Inevitably, poor welded specimens were found to contain two distinct regions within the interdiffusion zone. It is through the thinner region that failure occurs. This narrow region is associated with very high hardness as evidenced by the data of Fig. 13. This figure shows the results of a microhardness traverse made across the interface of a weld containing the sound interdiffusion zone and compares it with the hardness of a weld whose interdiffusion zone contains the thinner region which is susceptible to cracking. The elimination of this thin, easily cracked region is associated with outgassing of the 4340 prior to canning.

From these results it is evident that one source of interface contamination which serves as a barrier to welding is transfer during specimen heating of volatile contaminants from the 4340 to the surface of the Inconel 718. Consistently strong bonds can be achieved when this outgassing is accomplished prior to canning.

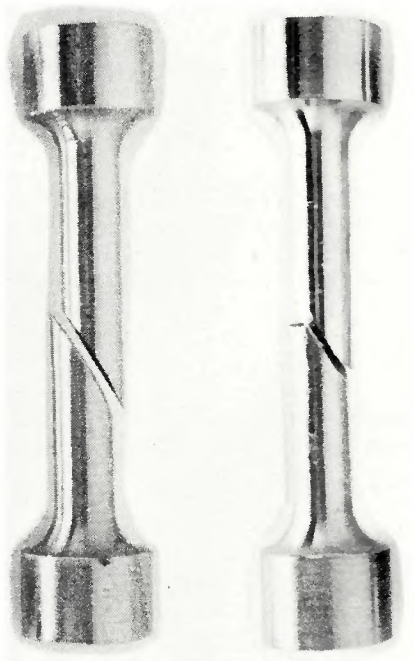

*Fig. 14 — Comparison of ductile tensile fractures exhibited using outgassed 4340 components with specimens prepared without outgassing*

Another form of bulk material preparation was the substitution of vacuum melted 4340 steel for nonvacuum melted stock. No significant difference in weld joint strengths was realized with this substitution. It is likely that outgassing both materials negated any difference in content of volatiles that would impair welding. Tensile specimens tested from HIP welds of each outgassed 4340 material to Inconel 718 demonstrated a mixed failure mode; fractures occurred across the joint and base metal in combination.

Hence, base metal strength appears to have been realized with outgassed specimens as opposed to nonoutgassed specimens which fail entirely in the joint. This comparison is shown in Fig. 14.

### Temperature

Two temperature levels were investigated in this work, one above (1730 ± 20 F) and one below (1270 ± 20 F) the $Ae_3$ temperature. Joint tensile strengths averaged better than 87,000 psi for all high temperature specimens while no bonding was achieved at the low temperature. In this case, the benefit of the high temperature is that it allows sufficient mobility (dissolution) of surface film contaminants to permit their dispersion from the joint interface. High temperature was not needed to realize intimate contact of components since specimens subjected to 20,000 psi hydrostatic pressure for 2 hr at only 1200 F demonstrated that intimate contact (but not welding) was found to occur even at these conditions.

### Surface Preparation

Data on joint tensile strengths were obtained as a function of surface preparation method. For this comparison the other preweld and weld variables were those used to weld the rotors except that several specimens were held at the welding temperature several hours longer. This deviation was previously shown to have no affect on weld quality.

From the data of Table 5 it is apparent that either cleaning and etching or cleaning alone is associated with high weld strength. No comparison of the effect on weld strength of surface preparation on specimens using nonoutgassed 4340 components is possible since the results are masked by the large variations in strength characteristic of nonoutgassed material.

**Table 5 — Tensile Strengths of Welds Prepared with Various Surface Preparations**

| Surface preparation | Avg tensile strength, psi |
|---|---|
| Cleaned and etched | 85,900 |
| Cleaned | 87,200 |

Another form of surface preparation utilized for pressure welding is the machining of surfaces to produce a known level of roughness. This variable's affect on weld quality was studied using the flat-faced specimens described previously. One set of specimens was machined to a 16-32 rms finish while another set was electric discharge machined to a 250 rms finish. This difference in surface finish had no effect on welds produced by the rotor welding process since each demonstrated identical average bend strength of 128,500 psi outer fiber stress. Clearly, the steel's low flow stress at the 1730 F nominal weld temperature masks any effect of surface roughness in attaining intimate contact.

### Magnetic Permeability

The HIP welded rotors, in addition to possessing high weld strength, were also required to have their 4340 pole pieces possess magnetic permeability in excess of 96% of that in a control sample which was cooled from the austenite range and isothermally held for 8 hr at 1165 F. Permeabilities were determined at a magnetizing force of 100 Oersteds, this value being the mean of the evaluated range. It was established during this study that the inverse correlation between hardness and magnetic permeability permitted the use of 20 Rockwell C hardness as the maximum hardness to be associated with acceptable permeability. The effect of integral heat treatment on magnetic permeability (as measured by 4340 hardness) is shown by the data of Table 6.

**Table 6 — Magnetic Permeability of 4340 Steel Associated with a Number of Integral Heat Treatments. Hardness less than that of the Control Sample Indicates Equivalent or Better Magnetic Permeability**

| Welding trial no. | Isothermal heat treatment conditions following welding in austenite range | $R_c$ hardness | Magnetic permeability as % of control sample[a] |
|---|---|---|---|
| Control sample | 8 hr at 1165 F | 20 | 100 (experimental) |
| 5 | none | 34 | 77.7 (experimental) |
| A | 10 hr at 1100 F | 21 | 96.7 (experimental) |
| O | 12 hr at 1200 F | 11 | >100 (determined from $R_c$ hardness) |
| X | 12 hr at 1200 F | 14 | >100 (determined from $R_c$ hardness) |
| Y | 12 hr at 1200 F | 13 | >100 (determined from $R_c$ hardness) |
| Z | 12 hr at 1200 F | 13 | >100 (determined from $R_c$ hardness) |

(a) Magnetic permeability determined at magnetizing force of 100 Oersteds

The hardness of specimens included in the rotor welding runs (Y and Z) was $R_c$ 13. The rotor pole pieces thus are known to possess magnetic permeability in excess of 96% of the control sample.

## Conclusions

1. Fabrication of hardware with precise complex joint interfaces such as the rotors in this program are ideal applications for HIP welding.

2. Hot isostatic pressing not only provides the conditions required to achieve a solid state weld, but inherently provides accommodation of mismatch in joint fit-up which can be anticipated in complex shapes. This is achieved by gross plastic flow which naturally occurs in the presence of a stress high enough to achieve microscopic intimacy of joint surfaces.

3. HIP welding cycles can incorporate integral heat treat cycles. This provides an added advantage of maintaining compressive isostatic pressure to assist in plastic accommodation of thermal strains associated with heat treatment transformations.

4. Degassing of 4340 steel proved to be essential in achieving consistent weld strength.

*Acknowledgement*

The authors wish to acknowledge the interest and support provided by the NASA Lewis Research Center program manager, Mr. John A. Milko, and his co-workers, Messrs. R. L. Davies and P. E. Moorhead. Work was sponsored by the Center under Contract NAS 3-11837.

The authors also extend their thanks to Messrs. A. King and J. McCabria of the Westinghouse Aerospace Electrical Division for the personal interest in this program and for their contribution by evaluating post weld heat treatments for HIP welded joints.

*References*

1. Moore, T. J., and Holko, K. H., "Solid State Welding of TD-Nickel Bar," *The Welding Journal*, Vol. 49 (9), September, 1970, Research Suppl., 395-s to 409-s.

2. Ludemann, W. D., "A Fundamental Study of the Pressure Welding of Dissimilar Metals Through Oxide Layers," report UCRL-50744, October 1969.

WRC Bulletin No. 176 Sept. 1972

**"Long-Range Plan for Pressure-Vessel Research — Third Edition"**

By the Pressure Vessel Research Committee

A suitable group to carry out the research planning for PVRC was created when the PVRC Program Evaluation Committee (now designated the Evaluation and Planning Committee) was formed in 1961. This group was originally charged with the responsibility of evaluating the research work done by PVRC and others, and to prepare a "PVRC Interpretive Report of Pressure Vessel Research" to make the results directly useable to the designer and Code-making bodies. During the review and evaluation of available information, voids in the state of knowledge and the need for further research became apparent. Although these items were mentioned in the report, they needed to be organized into a consistent plan. Thus, the 18 research topics submitted to PVRC by ASME in 1959 were combined with the research problems uncovered by the PVRC Interpretive Report and published as the "PVRC Long-Range Plan for Pressure-Vessel Research" in *WRC Bulletin 116,* September 1966.

The PVRC "long-range plan" was distributed as widely as possible for review and comment. Since then, a number of additional problem areas have been suggested by the ASME BPVC as well as by other organizations and by individuals within PVRC. Therefore, to keep the long-range plan timely and up to date, the Evaluation and Planning Committee agreed that it should be re-issued every three years. In accordance with this decision, the Second Edition of the long-range plan was issued in September 1969, in *WRC Bulletin 144,* and the Third Edition in September 1972, in *WRC Bulletin 176.* Some of the problems in the Second Edition were dropped and a number of new problems were added in the Third Edition.

The list of "PVRC Research Problems" is comprised of 42 research topics, divided into three groups relating to the three divisions of PVRC, i.e., Materials, Design and Fabrication. Each project is outlined briefly in a project description giving the: (a) Title; (b) Statement of Problem and Objectives; (c) Current Status; and (d) Action Proposed.

The price of *WRC Bulletin 176* is $3.00 per copy. Orders for single copies should be sent to the American Welding Society, 2501 N.W. 7th Street, Miami, Fla. 33125. Orders for bulk lots, 10 or more copies, should be sent to the Welding Research Council, 345 East 47th Street, New York, N.Y. 10017.

# WRC Bulletin
# No. 177
# October 1972

### "Comparison and Analysis of Residual Stress Measuring Techniques and the Effect of Post-Weld Heat Treatment on Residual Stresses in Inconel 600, Inconel X-750 and René 41 Weldments"

By H. B. Peacock, C. D. Lundin and J. E. Spruiell

A review of the published literature on the mechanisms responsible for the generation of residual stress is presented, along with an up-to-date state-of-the-art summary of the methods utilized for the measurement of the distribution and magnitude of residual stresses in welded components. These presentations are followed by the results obtained from experiments designed to provide the definitive information necessary to compare the results of the three most common techniques applied to weldments.

In these investigations residual stress distributions were determined for as-welded and stress-relieved disks of Inconel 600, Inconel X-750 and René 41. The primary method used to determine the residual stress distributions was the Sachs boring-out technique. However, for Inconel 600 the magnitude and distribution of the residual stresses were determined by two additional techniques, (1) the hole-drilling method and (2) the plugging-out method.

The research described in the report was performed as partial fulfillment of the requirements for a Ph.D. degree in Metallurgical Engineering at the University of Tennessee, Knoxville. Partial support of the research was provided through a grant from the University Research Committee of the Welding Research Council.

The price of *WRC Bulletin 177* is $3.50 per copy. Orders for single copies should be sent to the American Welding Society, 2501 N.W. 7th Street, Miami, Fla. 33125. Orders for bulk lots, 10 or more copies, should be sent to the Welding Research Council, 345 East 47th Street, New York, N.Y. 10017.

# WRC Bulletin
# No. 178
# November 1972

### "Joining Ceramics and Other Materials"

By H. E. Pattee

The technology of joining ceramics to metals has progressed steadily since its beginnings in the late 1930's. Like other joining processes, the joining of ceramics to themselves and to other materials was long considered to be more an art than a science. Because of extensive research efforts directed to the development of procedures for producing reliable ceramic-to-metal joints, much has been accomplished in the intervening years to establish a joining technology based on sound fundamental procedures and an understanding of the reactions that occur during joining.

This report discusses the joining of bulk ceramics to metals and other materials. Ceramic-to-metal joining as applied in the electronics industry is emphasized, because more research has been initiated by this industry than by any other. As a result, an extensive background of information is available. However, the techniques developed to produce ceramic-to-metal seals and joints for electronic devices can frequently be used for other applications.

The publication of this report was sponsored by the Interpretive Reports Committee of the Welding Research Council. The price of *WRC Bulletin 178* is $5.00 per copy. Orders for single copies should be sent to the American Welding Society, 2501 N.W. 7th Street, Miami, Fla. 33125. Orders for bulk lots, 10 or more copies, should be sent to the Welding Research Council, 345 East 47th Street, New York, N.Y. 10017.