Hydrogen Induced Cold Cracking in a Low Alloy Steel

A special test procedure was devised to permit observation of the precise location and the mechanism of cold cracking

BY W. F. SAVAGE, E. F. NIPPES AND E. S. SZEKERES

Abstract. A new approach to the problem of hydrogen induced cold cracking in weldments of quenched and tempered steels has been formulated. Some generalizations of hydrogen induced cold cracking are that (1) the cracks usually appear to be associated with the unmixed zone or the partially melted zone at the fusion boundary, (2) cracks are predominantly intergranular, (3) variations in crack susceptibility can exist among heats made to the same specification, (4) hydrogen must be present for the initiation and propagation of cracks, and (5) stresses of the order of the yield strength must be present.

For this investigation, two heats of HY-80 steel with a well documented difference in cold cracking susceptibility were obtained. Aspects of cold cracking in the two heats were investigated using a procedure that allowed direct microscopic observation of crack initiation and propagation in small stressed specimens. The primary reason for the difference in the degree of cold cracking between the two heats appeared to be a difference in the size and shape of the sulfides.

Although a small amount of hot microcracking was found in the crack-susceptible heat; hot microcracking did not appear to be a prerequisite for hydrogen induced cold cracking.

W. F. SAVAGE is Professor of Metallurgical Engineering and Director of Welding Research, and E. F. NIPPES is Professor of Metallurgical Engineering, Rensselaer Polytechnic Institute, Troy, N.Y. E. S. SZEKERES, formerly Research Fellow at R.P.I., is now Associate Research Consultant, Research Laboratory, U.S. Steel Corporation, Monroeville, Pennsylvania.

Introduction

The problem of hydrogen induced cold cracking in quenched and tempered low alloy steels is unlikely to be resolved without a greater understanding of both the location and the mechanism of crack initiation and the metallurgical response of the base material to the thermal cycle of welding.

A typical example of this cold cracking problem is the incidence of cracking at the fusion boundary in the apparent heat-affected zone in weldments of HY-80, a low carbon, quenched and tempered, low alloy steel.

In general, most investigators (Refs. 1-5) agree that the cracking in HY-80 is predominantly intergranular, at least in the early stages of propagation. Although the available evidence suggested that grain boundary segregation is involved in the cracking, the mechanism by which the segregation arises had not been completely resolved.

In a previous investigation at R.P.I., utilizing special etchants, it was noted that the fusion boundary of heterogeneous welds in HY-80 was not a simple fusion line but rather a region composed of: (1) an unmixed zone of weld metal which had a composition essentially that of the base metal and (2) a partially melted zone (Ref. 6*). Constitutional liquation of large sulfide inclusions and grain boundary liquation were identified in the partially melted zone. Sulfides that dissolved in the partially melted zone and in the unmixed zone precipitated in many cases as small globules at subgrain and solidification grain boundaries during the solidification of the molten material.

*Published in this issue, page 260-s

Objective

The major objective of this investigation was to correlate the cold cracking in HY-80 steel with identifiable metallurgical features and the amount of hydrogen present during welding

Materials and Experimental Procedures

Material

Two heats of 2 in. (51 mm.) HY-80 steel plate were used in this study. The check analyses for these two heats are listed in Table 1; the tensile and impact properties are given in Table 2.

These two particular heats were selected because of a well documented difference in their weldability in spite of a similarity in composition. It should be noted that Heat No. 72P305 (from here on referred to as Heat P) has a higher C, Ni, and Cr content than Heat No. N51755 (from here on referred to as Heat N).

The weldability of the two heats had been previously determined by means of the cruciform test, in which Heat P exhibited cracking in 73% of the weld length in Fillet C, whereas Heat N exhibited no cracking (Ref. 2). These heats were part of a series of 12 heats used in a statistical inves-

tigation which showed a fair correlation between the amount of cruciform cracking and the S and Ni contents of the individual heats.

Varestraint Tests of the Weld Metal

The Varestraint Test (Refs. 7, 8) was used to compare the weld metal hot cracking sensitivity of E11018G bead welds made on specimens from Heats P and N. The purpose of the tests was to determine whether or not dilution from the crack sensitive heat of HY-80 would affect the hot cracking behavior of the weld metal.

For these tests, specimens 12 × 2 in. (305 × 51 mm) by 1/2 in. (13 mm) thick were cut from plates with the 12 in. length parallel to the rolling direction and with the 2 in. width coinciding with the plate thickness. The specimens were oriented in this manner so that the bead weld would be made at the plate center where the segregation is the highest. All specimens were ground to a thickness of 0.500 ±0.002 in. (12.70 ± 0.05 mm) with a 30 (0.75μ) rms surface finish.

The bead welds were made with 3/16 in. (4.8 mm) diam E11018G electrodes by means of a stickfeeder utilizing 200 A, 22 V, and a travel speed of 6.5 ipm (165 mm/min), equivalent to a heat input of approximately 41 kJ/in. (1.6 kJ/mm). The electrodes were not baked before use.

The radii of the die blocks used were 12.5, 25, 50, and 100 in. (318, 635, 1270 and 2540 mm) which provided nominal augmented strains of 2, 1, 0.5, and 0.25%, respectively. A sample from each Varestraint specimen, was mounted, ground to remove the weld reinforcement, and polished for metallographic examination. In addition, metallographic samples of the fusion boundary were prepared from transverse sections of specimens strained at 2%.

Cold Cracking Tests

The Granjon direct observation technique (Ref. 9) was modified by applying a bending load to small welded 0.3 × 0.5 × 2 in. (7.6 × 12.7 × 51 mm) specimens so that the nucleation of cold cracks could be observed. Two specimen-to-plate orientations were utilized: in one, the banding was transverse, and in the other, the banding was parallel to the welding surface. With both orientations, as shown in Fig. 1, the weld bead location corresponds to the center of the as-received plate. All 0.5 × 2 in. (12.7 × 51 mm) surfaces were ground parallel, lapped, and rough polished with 600 grit polishing paper prior to welding.

Pairs of specimens with the same banding orientation, one from each heat, were clamped together between run-off tabs in a vise with the polished surfaces in contact, as shown in Fig. 2. E11018G welding electrodes were deposited with a stickfeeder utilizing 165 A, 22 V, and 7.5 ipm (190 mm/min) travel speed. High hydrogen welds (~30 ppm diffusible H) were made by wiping damp electrodes with a thin film of lubricating oil and also applying a few drops of oil to the surface of the specimens to be welded. The oil was necessary because preliminary tests

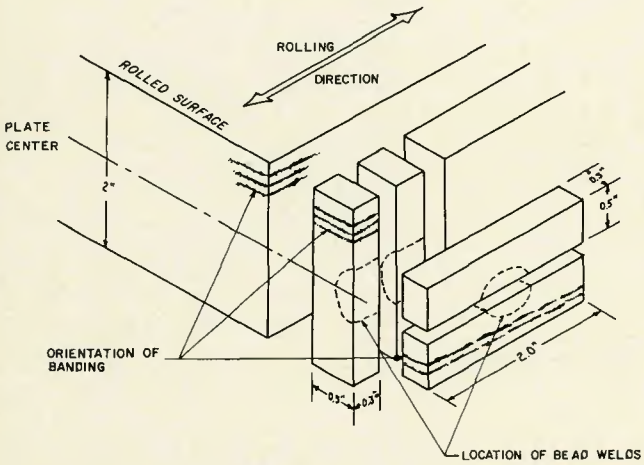

Fig. 1 — Orientation of cold cracking test specimens machined from the as-received HY-80

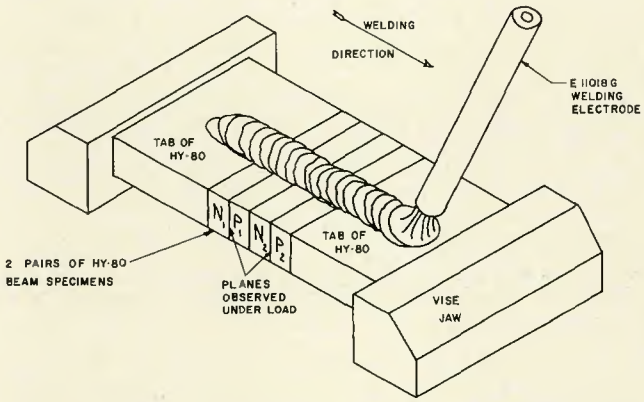

Fig. 2 — Schematic illustration showing the welding of cold cracking test specimens

Table 1 — Chemical Composition of HY-80 Used in this investigation

Check Analysis, percent

Heat no.	Furnace practice	C	Mn	P	S	Si	Ni	Cr	Mo	Aluminum sol	Aluminum insol	N	Total O_2, ppm
72P305	Open hearth	0.18	0.30	0.018	0.013	0.20	2.99	1.68	0.41	0.022 0.024	0.003	0.007	100
N51755	Electric	0.13	0.28	0.011	0.011	0.31	2.50	1.49	0.40	0.056 0.037	0.009	0.014	95

Inclusion Analysis, ppm

Heat no.	Oxides Al_2O_3	Oxides MnO	Oxides SiO_2	Nitrogen in Nitrides	Sulfides or Oxides Cr	Sulfides or Oxides Ti	Sulfides or Oxides V	Sulfides or Oxides Zr
72P305	55	23	18	49	410	13	5	3
N51755	185	42	15	110	435	20	8	5

indicated that simply wetting the electrodes did not introduce a sufficient amount of hydrogen into the welds to cause cracking or hydrogen bubble evolution. Low hydrogen welds (~2 ppm diffusible H) were made with electrodes that were baked at 800 F (427 C) for 1-1/2 h and used soon after removal from the baking furnace.

Immediately after welding, the composite weldment was water quenched and transferred rapidly into a bath of dry ice and acetone (about −105 F) (−76 C). After quenching, the composite weldment was removed briefly from the bath in order to allow separation of the specimens.

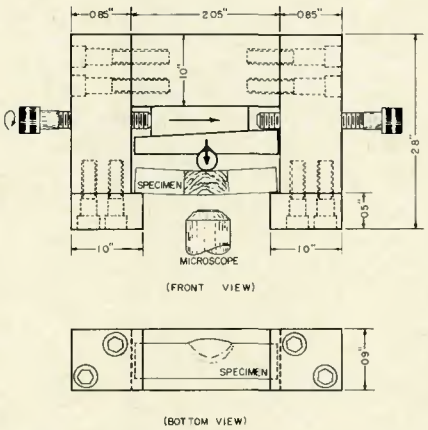

Fig. 3 — Detailed drawing of the loading apparatus used to stress specimens in the cold cracking test

This low temperature storage procedure was used in order to minimize the loss of hydrogen from the specimens. A lower storage temperature, such as available with liquid nitrogen, was purposely avoided in order to minimize transformation of any retained austenite that possibly would be present in the heat-affected zone of the specimens.

The preparation of a specimen for testing consisted of removing it from the bath, allowing it to warm to room temperature, then quickly polishing and etching. The specimen was then placed in a loading apparatus, detailed in Fig. 3. This loading apparatus stressed the specimen as a simple beam with a concentrated load at the center. To observe the evolution of hydrogen, a film of immersion oil was spread over the polished surface, and the loading apparatus, with the specimen inserted, was placed on the stage of a microscope. The specimen was observed with magnifications up to 250X under bright-field illumination, before and during stressing, to note any crack formation, and/or bubble evolution.

Metallographic Examination of the Fusion Boundary

Two special etching procedures (Ref. 6) developed at RPI were utilized for metallographic examination of the fusion boundary: (1) a two stage nital and sodium bisulfite etchant, and (2) an ammonium persulfate etchant with oblique lighting. Either of these two procedures revealed the presence of an unmixed zone and a partially melted zone (Ref. 6) in the apparent heat-affected zone. These zones are not discernible with normal metallographic procedures.

Results and Discussion

Varestraint Tests of Heterogeneous Weld Metal

The composite region cracking (Ref. 6) that was observed on the polished and etched surfaces of the Varestraint test specimens was evaluated qualitatively but not quantitatively because the cracking had an extremely irregular nature. This irregular cracking, with its many interconnecting branches, as shown in Fig. 4, appears to be typical of that produced by the Varestraint test in welds made with a filler metal.

The results of these tests were almost identical for Heats N and P. Thus, the heat from which the test specimens were taken did not influence the degree of hot cracking produced in the composite region of the weld metal. The maximum augmented strain that did not produce cracking, termed the *threshold strain,* was 0.33% for both heats.

In a previous investigation at RPI (Ref. 10) Varestraint specimens welded by the autogenous gas tungsten-arc process showed a considerable difference in the degree of weld metal cracking between Heats N and P, as shown in Fig. 5. The threshold strain for autogenous welds was smaller for Heat P than for Heat N, and Heat P had the greater number of cracks as well as the longer maximum crack length.

The results should not be construed to mean that the composite region of all types of heterogeneous welds made with E11018G electrodes on the two heats would fail to show a difference in crack susceptibility. For example, in the root pass of a grooved joint in heavy sections, the composite region would probably be much more diluted with base metal than the composite region of the bead welds produced in the Varestraint specimens in this investigation. Thus, the composite region of such root pass welds in Heats N and P would be expected to show a difference in crack susceptibility.

In an examination of the transverse cross section of the heterogeneous welds strained at 2%, only one fusion boundary crack was found. This hot crack, shown in Fig. 6, occurred in a specimen from Heat P. Although it is not possible to ascertain the nucleation point of a crack on a single section, the location of the crack shown in Fig. 6, with its center

Table 2 — Longitudinal Mechanical Properties of the HY-80 Used in this Investigation

Heat	Tensile specimen	0.2% Y.S., ksi	T.S., ksi	Elong., %	R.A., %	Charpy V energy, ft-lb 80F	Charpy V energy, ft-lb −120F
P	0.505 in.	88	108	25	74	143	121
N	0.252 in.	83	103	27	78	153	140

Table 3 — Summary of General Observations of Cold Cracking Test Specimens of HY-80

Heat	Rel. H_2 content	Banding to stress orientation	Bubble evolution	Number of cracks: fusion b'ndary [(a)]	Number of cracks: true HAZ
P	30 ppm	Transverse	Profuse	>12	>12 (long)
P	30 ppm	Parallel	Profuse	1-3	1-3 (short)
P	2 ppm	Transverse	None	1-3	0
P	2 ppm	Parallel	None	0	0
N	30 ppm	Transverse	Profuse	4-6	7-12 (medium)
N	30 ppm	Parallel	Profuse	0	0
N	2 ppm	Transverse	None	0	0
N	2 ppm	Parallel	None	0	0

(a) Includes cracks associated with the unmixed zone and/or the partially-melted zone.

at the weld interface, strongly suggests that it was nucleated either in the unmixed zone or in the partially melted zone.

It should be noted that the fusion boundary crack shown in Fig. 6 occurred at a location where a light etching alloy-rich band intersected the fusion boundary. The fact that such intersections of alloy-rich bands with the fusion boundary appear to be preferential sites for crack initiation will be elaborated upon later.

General Observations

The observations of the welded specimens from Heats N and P tested at room temperature in the loading apparatus are summarized in Table 3. These observations revealed the following general features:

1. None of the specimens from either Heat N or P welded under low hydrogen conditions exhibited hydrogen bubble evolution or cold cracking.
2. All specimens welded under high hydrogen conditions exhibited bubble evolution and some degree of cold cracking in one or more of three regions: (a) in the true heat-affected zone, (b) at the fusion boundary, subsequently determined to be associated with the unmixed zone and/or the partially melted zone.
3. The observed cracking in the high hydrogen specimens was primarily delayed in nature. In other words, the cracks generally initiated shortly after application of the load and extended with time, accompanied by steady and/or intermittent hydrogen bubble evolution. The bubble evolution confirmed the association of hydrogen with delayed cracking.
4. Under similar welding conditions, the degree of cracking in Heat N specimens was always less than in Heat P specimens.
5. Cracking in the true heat-affected zone in both heats of HY-80 appeared to be nucleated by sulfide inclusions.
6. Most of the cracks, both at the fusion boundary and in the true heat-affected zone, appeared to propagate along light etching alloy-rich bands of the base metal.
7. In the specimens welded under high hydrogen welding conditions with the rolling direction oriented parallel to the direction of the principal stress, the cracks were generally shorter and less likely to be nucleated within the fusion boundary than were those in specimens welded with the rolling direction transverse to the stress direction.
8. Cold cracks associated with the unmixed zone, partially melted zone, and true heat-affected zone were predominantly intergranular.

The Role of Hydrogen

Cracking in the true heat-affected zone did not occur in either Heat N or P when welding was performed under low hydrogen conditions. (The few fusion boundary cracks observed in Heat P will be discussed below). These results conclusively confirm the fact that hydrogen is a major factor influencing the degree of delayed cracking.

The absence of both cold cracking and bubble evolution in the specimens welded under low hydrogen conditions implies that this welding procedure was adequate in preventing the introduction of a significant amount of hydrogen.

With all of the cold cracking test specimens that were welded under high hydrogen conditions, bubble evolution was observed at such sites as inclusions, grain boundaries, and cracks. Evolution at inclusions and grain boundaries usually appeared as single bubbles evolving with rapid regularity. Bubble evolution along the length of growing cracks occurred usually with regularity but also as intermittent bursts of a multitude of small bubbles.

The intermittent bursts of bubbles from near a crack-tip can be explained by the Troiano model for hydrogen embrittlement (Ref. 11). According to this model, shown in Fig. 7, nascent hydrogen in the matrix of the embrittled metal diffuses to regions of triaxial stress associated with a stress riser. When the hydrogen concentration in the stressed region reaches a

Fig. 4 — Irregular weld metal cracking in a Varestraint test specimen from Heat P strained 2%. Ammonium persulfate etchant; X10, reduced 40%

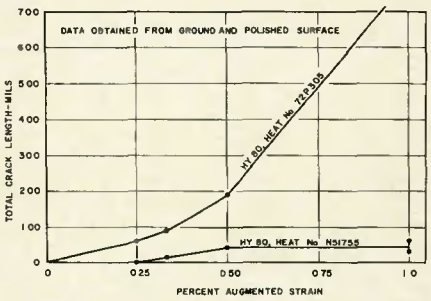

Fig. 5 — Results of previous Varestraint tests on specimens from Heats P and N welded by the gas tungsten-arc process

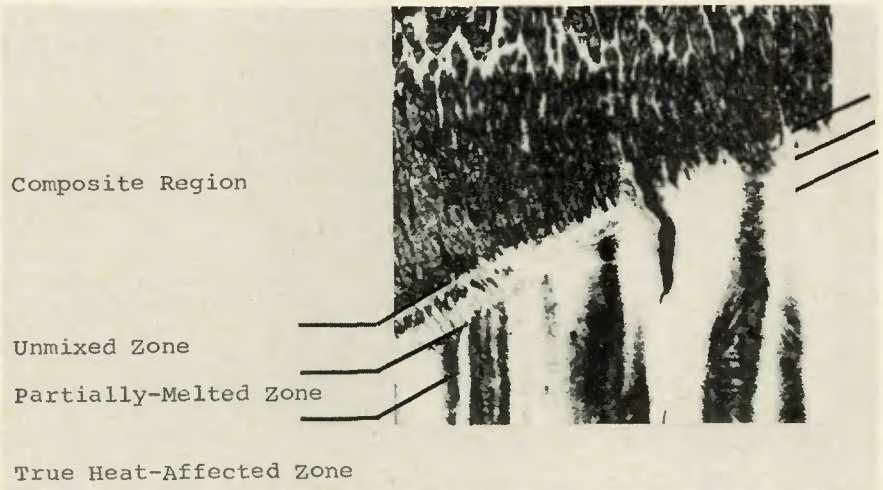

Fig. 6 — A transverse section showing a fusion boundary crack in a Varestraint test specimen from Heat P strained 2%. Nital and sodium bisulfite procedure; X300, reduced 24%

critical amount, atomic bonds break, causing either the formation of a new crack or the extension of an existing crack. As the crack extends, part of the atomic hydrogen which had diffused into the triaxially stressed region ahead of the crack tip will be released because of the reduction of stress concentration. This hydrogen would then diffuse down the newly created crack surface to appropriate nucleation sites where bubbles of molecular hydrogen would form, as shown in Fig. 7.

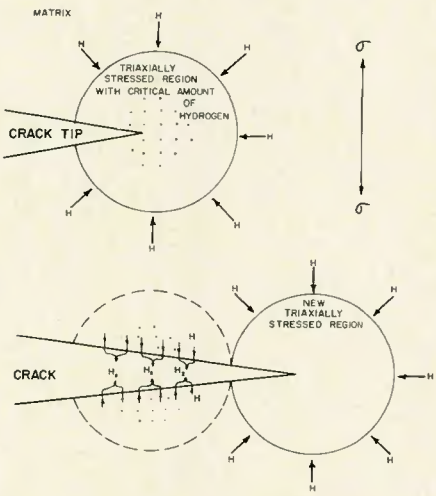

Fig. 7 — Schematic illustration of the probable mechanism producing the intermittent bursts of hydrogen observed during delayed cracking

Fig. 8 — Example of sulfide inclusions along a crack in the heat-affected zone of a cold crack test specimen welded under high hydrogen conditions. Polished and unetched; X1000, reduced 46%

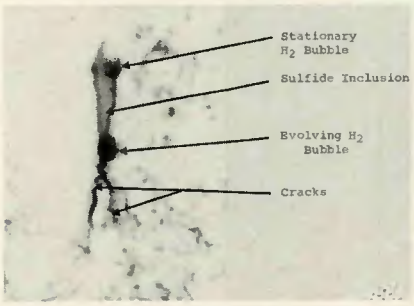

Fig. 9 — Example of crack nucleation by a sulfide inclusion in a bead weld in Heat P. Nital etchant, X2100, reduced 61%

Nucleation of Heat-Affected Zone Cracks by Sulfide Inclusions

Table 3 indicates that true heat-affected zone cracking, although occurring in both heats of HY-80, was less extensive in Heat N than in Heat P. In both heats of HY-80, elongated sulfide inclusions, in combination with dissolved hydrogen, appeared to be associated with cracking in the true heat-affected zone. A typical example of this association of sulfides and true heat-affected zone cracking is shown unetched in Fig. 8. The fact that Heat N had less elongated sulfides than Heat P would account for the fewer cracks nucleated in Heat N.

Figure 9 shows an excellent example of cold crack nucleation by a typical elongated sulfide in the heat-affected zone of a bead weld in a Heat P specimen, in which the principal stress direction was transverse to the banding and the inclusion. Note that the cracks were nucleated at the acute edge of the inclusion where the stress concentration was higher. Although the cracks did not propagate beyond the extent shown in Fig. 9, hydrogen bubble evolution was observed to continue for several hours in a periodic fashion from a site along the inclusion-matrix interface near the acute edge of the inclusion. The site of bubble evolution was probably a separation of the inclusion-matrix interface. Such a separation could be a result of the loss of cohesion due to a hydrogen-sulfur reaction at the inclusion-matrix interface.

In HY-80, sulfide inclusions in combination with hydrogen would probably be especially effective crack initiators in the heat-affected zone because they could be surrounded by a micro-structure of untempered martensite which, because of segregation, would have a higher C content than the nominal analysis.

The results of this investigation suggest that the size and shape of the sulfides can influence the nucleation of cold cracks in different heats of HY-80 even though the volume fraction of the sulfides in the heats is about the same. It can be argued that the amount of hydrogen necessary to cause a sulfide inclusion to become a crack initiator is a function of how effective the inclusion is as a stress raiser. Large, thin ellipsoidal sulfide inclusions would be extremely effective in nucleating cracks in the heat-affected zone of welds in HY-80. Furthermore, such large, flat, sulfide inclusions would be more effective than globular inclusions in pinning moving grain boundaries in the true heat-affected zone during welding. If prior-austenite grain boundaries become aligned with elongated sulfides, as has been demonstrated in this laboratory (Ref. 6), an especially effective crack initiation site would result because hydrogen could arrive at the triaxially stressed region more readily via the grain boundary. In other words, the grain boundary could then serve as a "pipeline" tapping sources of hydrogen relatively far removed from the stress raiser. In fact, the probable ease of hydrogen diffusion along grain boundaries may account for the predominance of intergranular cold cracks.

Even in the newer quenched and tempered steels which have very low S contents (0.003 to 0.009%) and improved weldability (Ref. 12), the nature of the sulfides in some heats could be deleterious. For example, Randall et al (Ref. 13) have reported that in a heat of ultra high strength steel with 0.007% S, the stringered nature of the sulfide inclusions was responsible for the heat having poorer bend-ductility than a similar heat in which the sulfides were not in a stringered form.

Another factor that could influence the role of sulfides is that in the regions near to the fusion boundary, the cohesion of the inclusion-matrix interface of sulfides may be significantly lower due to the very high temperatures attained (Ref. 14). Under these conditions, the welding stresses could separate the matrix from the sulfide inclusion and thus provide a void sufficient in size to become a hydrogen trap (Ref. 15) which would result in a more effective crack initiator.

Influence of Banding on Heat-Affected-Zone Cracking

The orientation of the bands in the specimen with respect to the principal stress direction had a considerable effect on the degree of cold cracking in the true heat-affected zone. All true heat-affected zone cracks in the specimens in which the banding was transverse to the stress direction were observed to be within light etching alloy-rich bands, as exemplified in Fig. 10. Although several of the longer cracks had crossed over to adjacent parallel light etching bands, the cross-over locations were generally at ends of dark etching, alloy-lean bands or where the dark etching bands were relatively narrow. However, the cracks in Heat N also generally appeared to be shorter than in Heat P indicating that cracks did not propagate as readily in Heat N. The reason for the low propensity for crack propagation in Heat N is not obvious but could be related to its lower C content.

On the other hand, in the specimens in which the bands were paral-

lel to the stress direction, true heat-affected zone cracking was virtually eliminated. Heat N had no cracks and Heat P had two cracks. One of these cracks in Heat P is shown in Fig. 11 after repolishing and etching with the two-stage procedure. Note that both ends of the crack were arrested in a dark etching band, which suggests that cracks become severely blunted upon entering relatively tough, alloy-lean bands. The low incidence of cracking with the parallel orientation results from the fact that the elongated sulfides, being parallel to the stress direction, are less effective as stress raisers and thus crack nucleation is considerably reduced or essentially eliminated.

Cracking Associated With the Fusion Boundary

As shown in Table 3, the specimens from both Heats N and P which were welded under high hydrogen conditions, and with the planes of banding transverse to the stress direction, exhibited some degree of cold cracking associated with the fusion boundary. The predominant type of crack nucleated at or near the apparent fusion boundary and developed into a macrocrack by propagating into the heat-affected zone preferentially along the light etching alloy-rich bands. One example of the development of this type of cracking, in a Heat P specimen, is shown in Fig. 12 by a sequence of photomicrographs at 50X. The cracking was delayed in nature and accompanied by the evolution of hydrogen bubbles which appear as solid black circles on the photomicrographs.

In a Heat-P specimen welded under high hydrogen conditions but with the bands parallel to the principal stress direction, a few small fusion boundary cracks were observed during testing. However, repolishing the specimen for further examination resulted in the removal of these cracks which indicates they had been very shallow. The shallow nature of the cracks suggests that crack propagation across alloy-lean bands at the fusion boundary is relatively difficult.

As discussed above, a similar observation was noted for the propagation of true heat-affected-zone cracks. A Heat N specimen which was welded under high hydrogen conditions and with the banding parallel to the stress direction exhibited no cracking at the fusion boundary. A factor contributing to the lower incidence of cracking with the parallel banding-to-stress orientation is the low depth to width ratio of bead welds, which in this investigation was nearly 1 to 6. With a low depth to width ratio, the number of bands intersecting the fusion boundary would be greater with the transverse banding orientation; hence, there would be more opportunities for crack initiation sites to be present at the fusion boundary.

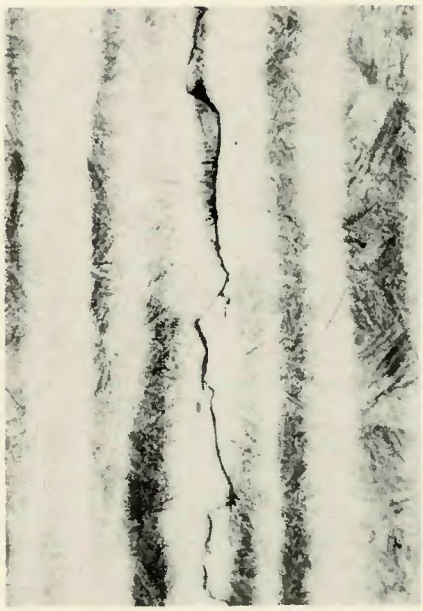

Fig. 10 — Example of a true heat-affected zone crack along light etching alloy-rich bands in the cold cracking test specimen from Heat P welded under high hydrogen conditions. Banding perpendicular to stress direction. Nital and sodium bisulfite procedure; X250, reduced 28%

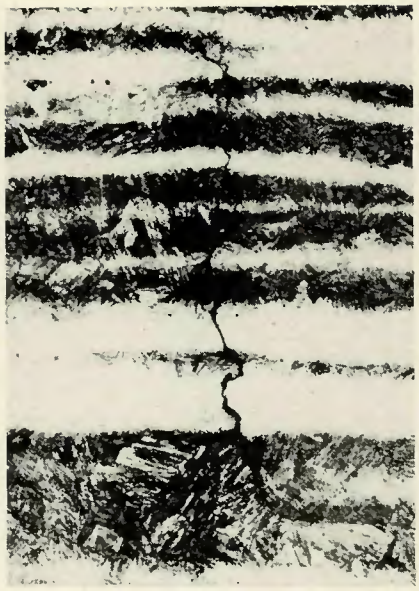

Fig. 11 — Example of a true heat-affected zone crack in a cold cracking test specimen from Heat P. Banding parallel to stress direction. A crack with propagation stopped in dark etching alloy-lean bands. Nital and sodium bisulfite procedure; X500, reduced 28%

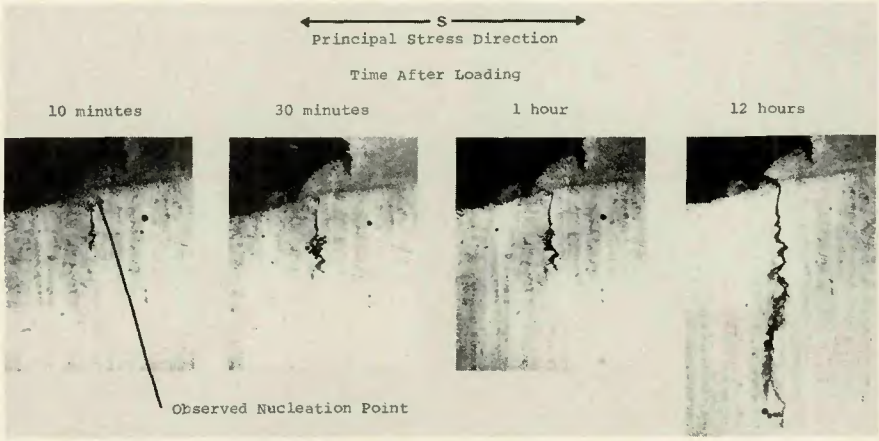

Fig. 12 — An example of delayed cracking nucleated at the fusion boundary in a cold cracking test specimen from Heat P. The black area at the upper left corner of the photomicrographs is a region pulled out during separation of the welded specimens. Nital etchant; X50, reduced 51%

In a Heat P specimen welded under low hydrogen conditions and with a transverse banding-to-stress orientation, three locations exhibiting apparent hot cracking were also found. These locations, associated with alloy-rich bands, were entirely within the unmixed zone, and were clearly at substructure boundaries. The morphology of the crack shown in Fig. 13 is typical, and is indicative of hot cracking and not cold cracking. The presence of these cracks confirms the hot cracking tendency of unmixed weld metal in Heat P. The fact that these cracks did not propagate significantly even though the specimen was held 12 h under a load near the yield stress is undoubtedly the result of the low hydrogen content of this specimen.

Apparently, hot microcracking can occur in HY-80 but is probably limited to segregated regions in relatively rich analysis heats. Such microcracks could propagate at lower temperatures only if sufficient hydrogen is present. Therefore, hot microcrack-

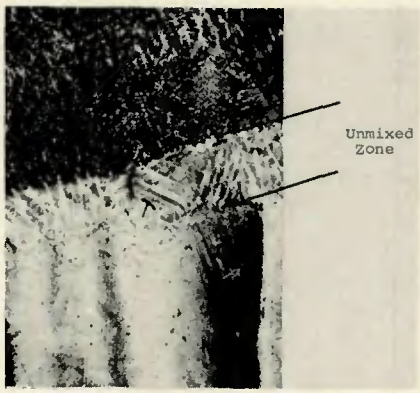

Fig. 13 — Hot crack at the substructure boundaries in the unmixed zone in a cold cracking test specimen from Heat P welded under low hydrogen conditions. Banding transverse to stress direction. Nital and sodium bisulfite procedure; X500, reduced 50%

Fig. 14 — Example of a crack embryo nucleated at a liquated grain boundary in the partially melted zone of a specimen from Heat P welded under high hydrogen conditions. Banding transverse to stress direction. Nital and sodium bisulfite procedure; X500, reduced 28%

ing plays only a minor role in the overall cracking problem in HY-80.

Nucleation of Cold Cracks in the Partially Melted Zone

Careful examination of the partially melted zone in a Heat P specimen welded under high hydrogen conditions, revealed crack embryos for which the nucleation point was quite obvious. For example, Fig. 14 shows a crack embryo associated with a *liquated grain boundary.* Other crack embryos were found which were nucleated by very small sulfides which precipitated in a *constitutionally liquated region.* Both of these types of cracks occurred within alloy-rich bands, again emphasizing the role of solute segregation in the base metal.

A factor that aids a region of localized melting in eventually becoming a site for crack nucleation is the large difference in hydrogen solubility between liquid and solid iron. Because liquid iron can dissolve approximately three to four times more nascent hydrogen than the solid, the liquated grain boundaries, with hydrogen present, can serve as "pipelines" along which hydrogen can readily diffuse from the weld metal into the heat-affected zone. Therefore, the liquated boundaries, even after cooling to ambient temperatures, could be locations of high hydrogen concentration. In such cases, any rift, inclusion-matrix interface and/or stress raiser in the vicinity of the liquated regions has a very immediate source of hydrogen which can catalyze crack propagation.

A Mechanism for Crack Nucleation in the Unmixed Zone

Crack nucleation in the unmixed zone may be largely a result of the redistribution of solute during solidification. Almost every one of the usual alloying elements and impurity elements in steels such as HY-80 will segregate to grain boundaries and subgrain boundaries during solidification. These alloy-rich areas will have a higher C content and hence will be more crack sensitive than the lower C cores of the subgrains.

Cracking in the Cruciform Test

A preliminary metallographic examination of a sample taken from a cruciform test specimen revealed the presence of one macrocrack under fillet weld C. Under commonly used super-picral etchant, this crack appeared to be almost exclusively within the heat-affected zone immediately adjacent to the fusion boundary. This location of the cracking is typical for cruciform tests of low alloy steels.

However, when the sample was repolished and etched with either ammonium persulfate etchant or the two-stage nital and sodium bisulfite procedure, much of the intergranular crack path was observed to pass through the unmixed zone and the partially melted zone. For example, Fig. 15a shows a typical digression of the crack path into the unmixed zone, and Fig. 15b shows typical crack branches into the unmixed zone.

These results indicate that cruciform cracking is significantly associated with both the unmixed zone and partially melted zone of the fillet weld. Furthermore, this observation can explain the fact that Heat P showed a higher crack susceptibility than Heat N in both the Varestraint tests with heterogeneous welds (Ref. 2).

The fact that cracking in the cruciform tests can be associated with the unmixed and partially melted zone does not necessarily detract from the usefulness of the cruciform test in evaluating base metal weldability. However, comparisons should be avoided between cruciform test results and results of tests in which only the true heat-affected zone is tested.

A New Approach to the Understanding of Cold Cracking in Welds

From the results of this investigation, a new approach to the understanding of cold cracking of welds in quenched and tempered low alloy steels can be formulated. This approach incorporates the following basic premises:

1. In heterogeneous welds, the junction between the composite region and the true heat-affected zone is not simply a "fusion line" but, in fact, a complex region consisting of two distinct narrow zones which can be called the unmixed zone and the partially melted zone. The various phenomena that occur within these zones can contribute significantly to the nucleation of cracks. However, the more common metallographic procedures presently in use do not reveal these zones.
2. In the heat-affected zone, the microstructure primarily affects the propagation of cracks which are chiefly nucleated either by sulfide inclusions or by conditions resulting from sulfide inclusions. However, the nature of the inhomogeneities in the base metal, produced when the ingot solidifies, greatly influences both crack nucleation and crack propagation. The factors influencing the weldability appear to be: (a) the degree of segregation that occurs during the solidification of the ingot and becomes manifested as banding in the final product, and (b) the size, shape, and distribution of the sulfide inclusions.

The nominal composition obtained by a usual check analysis reveals no information about either of these two factors.

3. Hydrogen is the catalyst for the initiation as well as the propagation of cold cracks. Although, under certain conditions, a small amount of hot microcracking may occur in welds in low alloy steels, the presence of dissolved hydrogen is essential for the propagation of these microcracks in the cold condition.

Conclusions

1. The following conclusions pertain to Varestraint tests of the weld metal produced in HY-80 steel with E11018G electrodes:

a. Hot cracking in the composite region of bead welds deposited with E11018G electrodes is extremely irregular and is not readily evaluated quantitatively.

b. The large difference in weldability between the two heats of HY-80 did not influence the hot cracking behavior of the composite region of the weld metal produced in the Varestraint test.

2. The following conclusions pertain to cold cracking tests of HY-80:

a. The cold cracking test procedure used in this investigation is an excellent method for investigating the nucleation and propagation of cold cracks in low alloy steels.

b. Hydrogen is necessary for the propagation of cracks and appears to be the catalyst for the nucleation of the cracking.

c. Hot microcracking in the unmixed zone at alloy-rich locations is a valid but probably infrequent mechanism of crack nucleation in rich-analysis heats of HY-80. However, the presence of hydrogen is required for the propagation of such microcracks.

d. Cold cracking occurs preferentially in alloy-rich bands in the true heat-affected zone and adjacent to the weld interface.

e. Cold cracking in the true heat-affected zone was almost exclusively nucleated by elongated sulfide inclusions.

f. Cold cracking In the partially melted zone can be nucleated by liquated grain boundaries and by small precipitated sulfides in constitutionally liquated regions.

3. The following conclusions pertain to the observed location of the cracks in the sample from the cruciform test specimen:

a. A considerable length of the crack under fillet weld C traversed the unmixed zone and the partially melted zone, indicating that it is inaccurate to assume that cracking in the cruciform test is simply heat-affected-zone cracking.

b. The existence and nature of the unmixed zone and the partially melted zone may provide an explanation for the correlation between the cold cracking susceptibility as measured by the cruciform test and the hot cracking susceptibility as measured by the Varestraint test.

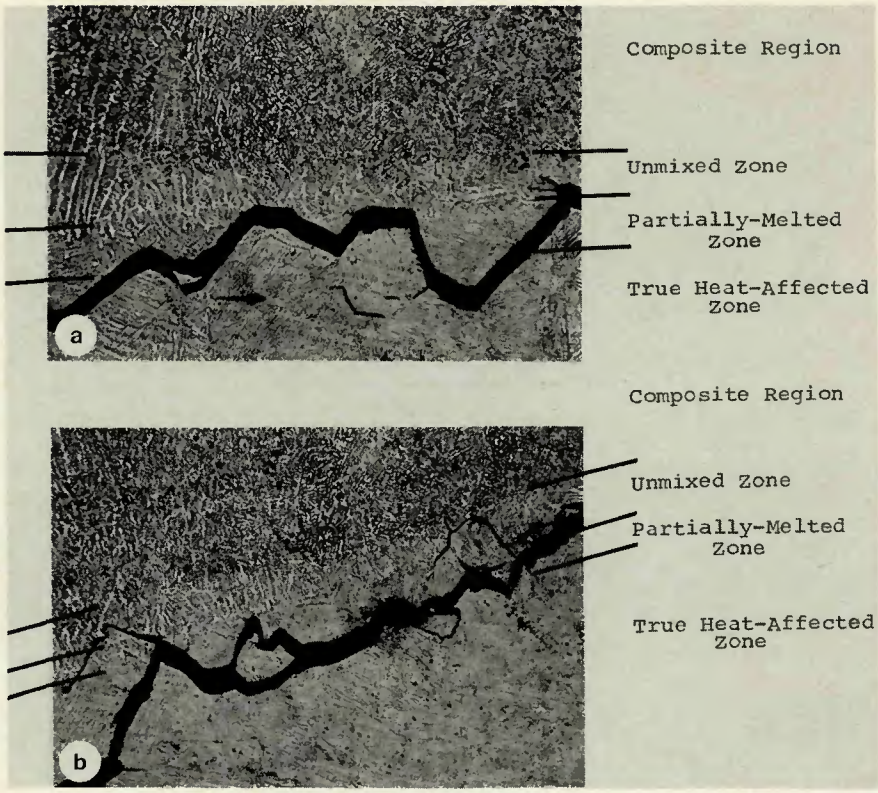

Fig. 15 — Views along the macrocrack under fillet weld C on a transverse section of a cruciform test specimen of HY-80. Ammonium persulfate etchant. (a) A digression of the crack path into the unmixed zone. (b) Crack branches into the unmixed and partially melted zones. X250, reduced 31%

References

1. Doty, W. D. and Grotke, G. E., "Some Observations on the Weldability of Quenched and Tempered High Yield Strength Alloy Steels," Conference Proceedings, U.S. Navy Bureau of Ships, Washington, D.C., 34 to 67, March 21 and 22, 1960.

2. Rathbone, A. M. and Gross, J. H., "Factors Influencing Heat-Affected Zone Cracking of HY-80 Steel Weldments," Technical Report 56.02-001(4), U.S. Steel Corp., Applied Res. Lab., Monroeville, Pa., June (1962).

3. Masubuchi, K. and Martin, D. C., "The Mechanism of Cracking in HY-80 Steel Weldments," *Welding Journal*, 41(8), Aug. 1962, Research Suppl., 375-s to 384-s.

4. Griffin, R. J., "Cold Cracking in the Heat-Affected Zone of HY-80 Welded Joints," *Bureau Ships Journal*, 5, 9 to 17 (1959).

5. Emmanuel, G. N., Young, D. E. and Spahr, G. L., "The Metallurgy of Heat-Affected Zones in HY-80 High Strength Steel," *Metals Engineering Quarterly*, 1(3), 82 to 97 (1961).

6. Savage, W. F., Nippes, E. F. and Szekeres, E. S., "A Study of Weld-Interface Phenomena in a Low Alloy Steel," *Welding Journal*, 55(9), Sept. 1976, Research Suppl., 260-s to 268-s.

7. Savage, W. F. and Lundin, C. D., "The Varestraint Test," *Welding Journal*, 44(10), Oct. 1965, Research Suppl., 433-s to 442-s.

8. Savage, W. F. and Lundin, C. D., "Application of Varestraint Technique to the Study of Weldability," *Welding Journal*, 45(11), Nov. 1966, Research Suppl., 497-s to 503-s.

9. Granjon, H. P., 1961 Adams Lecture: "Studies on Cracking of and Transformation in Steels During Welding," *Welding Journal*, 41(1), Jan. 1962, Research Suppl., 1-s to 11-s.

10. Bell, J. R., "A Study of the Relationship of Microsegregation to Cracking in Constructional Alloy Steels," Master's Thesis, Rensselaer Polytechnic Institute, Troy, New York (1966).

11. Elsea, A. R. and Fletcher, E. E., "Hydrogen Induced Delayed Brittle Failures of High Strength Steels," Defense Metals Information Center Report 199, Battelle Memorial Institute, Columbus, Ohio, January 20, 1964.

12. Rathbone, A. M., Connor, L. P. and Gross, J. H., "Weldability of a High Toughness Alloy Plate Steel With a Minimum Yield Strength of 140 KSI," *Welding Journal*, 43(12), Dec. 1964, Research Suppl., 551-s to 563-s.

13. Randall, M. D., Monroe, R. D. and Rieppel, P. J., "Causes of Microcracking and Microporosity in Ultra-High Strength Steel Weld Metal," *Welding Journal*, 41(5), May 1962, Research Suppl., 193-s to 206-s.

14. Boniszewski, R. and Baker, R. G., "Burning and Hot Testing in the Weld Heat-Affected Zone of Ferritic Steel," *Journal of the Iron and Steel Institute*, 202(11), 921 to 928 (1964).

15. Boneszewski, T. and Moreton, J., "Effect of Micro-Voids and Manganese Sulphide Inclusions in Steel on Hydrogen Evolution and Embrittlement," *British Welding Journal*, 14(6), 321 to 336 (1967).

The new edition of the Structural Welding Code, AWS D1.1-75 is here — completely revised with important requirements that you need to know.

Automatic Revision Service

The price of both the looseleaf and the soft-cover bound versions of the 1975 Structural Welding Code includes the 1976 and 1977 Revisions, automatically sent to you as they are published.

Sturdy 3-Ring Binder

The heavy-duty vinyl binder will hold the Structural Welding Code, the soon-to-be published Code Commentary, and the Reinforcing Steel Welding Code, AWS D12.1-75 (the latter two documents to be sold separately). The binder includes dividers for the main sections of D1.1-75 as well as the other two publications mentioned.

A limited number of soft cover bound copies is available.

Structural Welding Code

1. Looseleaf text, D1.1-75, in binder with dividers plus 1976 and 1977 revisions $25.00
2. Soft cover bound text, D1.1-75, plus 1976 and 1977 revisions $24.00

Reinforcing Steel Welding Code, AWS D12.1.75 soft-cover, bound $5.00
Code Commentary, soft-cover bound ..... Price not set

Discounts: 25 percent to A and B members; 20 percent to bookstores, public libraries and schools; 15 percent to C and D members. Add 4 percent sales tax in Florida. Send orders to: American Welding Society, 2501 N.W. 7th St., Miami, FL 33125.