Influence of Preheat Temperature on Stellite Deposits

Preheating to 900°C, followed by air cooling to 450°C after deposition to avoid further sensitization of the base metal and then furnace cooling to room temperature produces sound deposits without any undesirable features

BY M. D. MATHEW, S. L. MANNAN AND S. K. GUPTA

ABSTRACT. The influence of preheat temperatures in the range 150–900°C (302–1652°F) on Stellite deposits on Types 304 and 316 stainless steel has been studied. Stellite grade 6 (AWS RCoCr-A) bare rod was used and the oxyacetylene welding process was employed to prepare the overlays. The metallurgical evaluation of the various deposits included metallographic investigations, microhardness measurements and electron microprobe studies on the Stellite deposit, the interface between Stellite and base and the base material. Microcracks were observed in the Stellite as well as along the interface in deposits prepared by employing preheat temperatures of 150 and 300°C (302 and 572°F). Preheating to 600°C (1112°F) tends to sensitize the base material. It has been established that a preheat temperature of 900°C (1652°F) and air cooling to 450°C (842°F) after deposition, followed by furnace cooling to room temperature produces sound deposits without any undesirable features.

Microhardness measurements were taken along the microprobe traverses to examine the variation in hardness along with elemental distribution across the interface. Microhardness across the interface has been found to correlate with the cobalt content.

Introduction

Austenitic stainless steels have been chosen for various structural components of sodium-cooled fast breeder reactors because of their excellent corrosion resistance in liquid sodium and good elevated temperature mechanical properties. The high operating temperatures necessitate hardfacing of certain components to avoid galling and also to reduce the wear of the component. In addition, the deposit should have good thermal shock resistance as well. Stellite grade 6 (corresponding to AWS RCoCr-A) has, therefore, been specified for hardfacing various components like the control rod drive mechanism (CRDM), core cover plate drive mechanism, grid plate and various subassemblies in the reactor core of the fast breeder test reactor (FBTR) now under construction at the Reactor Research Centre, Kalpakkam.

This paper presents the results of a detailed study of the influence of preheat temperature on the quality of AWS RCoCr-A deposits on Types 316 and 304 stainless steel CRDM component. Owing to the low ductility of cobalt-base alloys, inadequate preheat

M. D. MATHEW and S. L. MANNAN are with the Metallurgy Programme and S. K. GUPTA is with the FBTR Construction Group, Reactor Research Center, Kalpakkam Tamil Nadu, India.

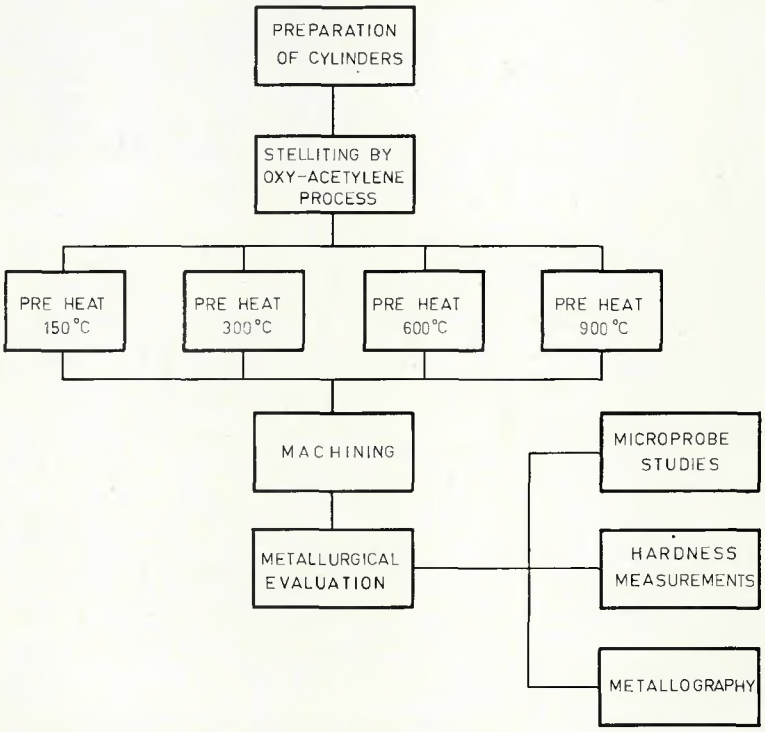

Fig. 1—Block diagram of experimental program

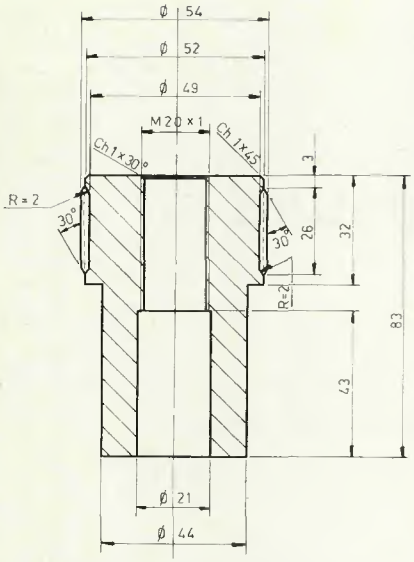

Fig. 2—Part of control rod drive mechanism used for surfacing with AWS RCoCr-A type bare rod

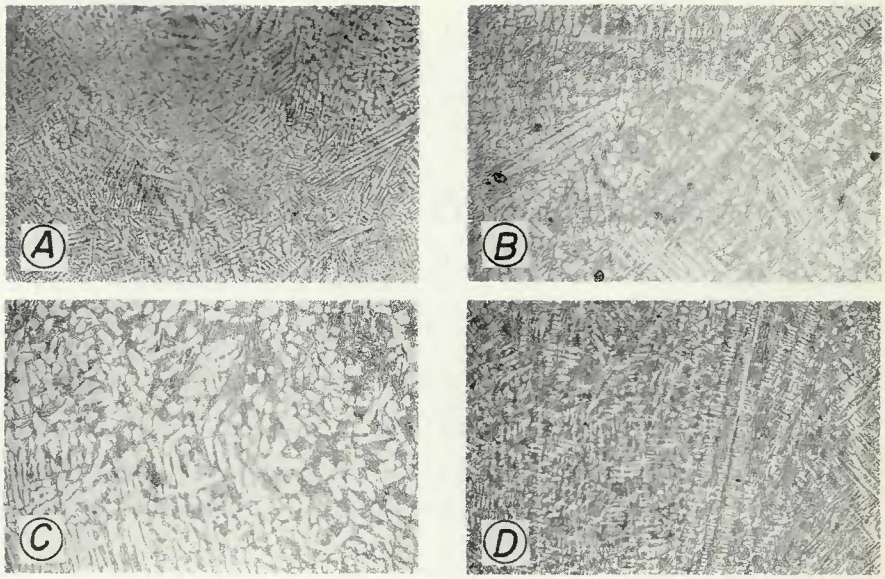

Fig. 3—Micrographs showing typical Stellite (i.e., AWS RCoCr-A) deposits prepared by employing preheat temperatures of: A—150°C (302°F); B—300°C (572°F); C—600° (1112°F); D—900°C (1652°F)

Table 1—Hardness of AWS RCoCr-A Type Deposits

Deposit	Rockwell C
A	45–50
B	47–49
C	46–47
D	47–52

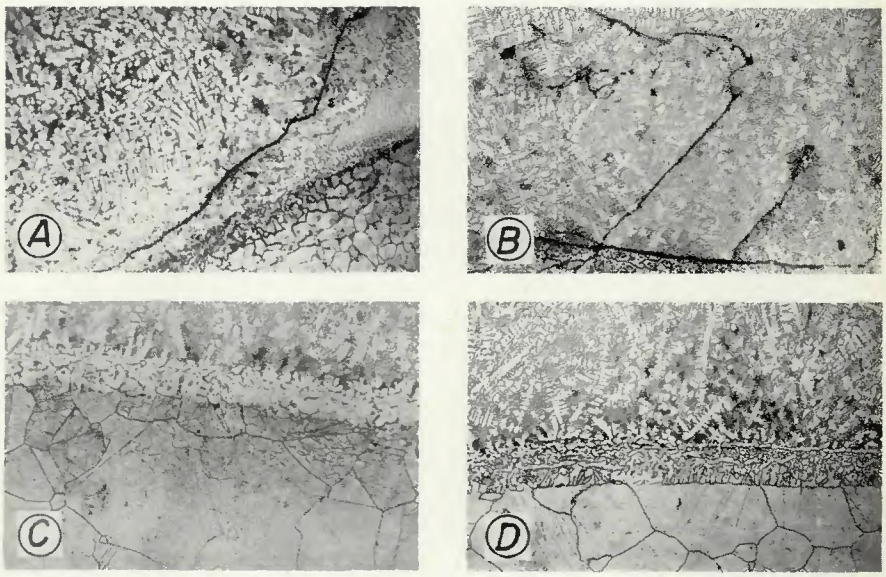

Fig. 4—Micrographs showing microcracks in deposits prepared by employing preheat temperatures: A—150°C (302°F) and B—300°C (572°F); interface regions with preheat temperatures: C—600°C (1112°F) and D—900°C (1652°F)

can lead to the cracking of the deposits by high shrinkage stresses developed during welding. Preheating reduces shrinkage stresses and eliminates cracking and distortion, provided the preheating is uniform. In addition, preheating to high temperatures leads to greater dilution of the deposit with the base metal imparting some gradient in its mechanical properties and consequent resistance to shock, though at the cost of wear resistance. The results of the present investigation indicate that it is essential to preheat the base metal to higher temperatures $\simeq$ 900°C (1652°F) followed by slow cooling in order to produce sound deposits with the desired properties.

Experimental Procedure

Figure 1 shows the block diagram of the experimental program.

Preparation of the Deposits

The component of CRDM was machined from a 55 mm (2.17 in.) diameter round as shown in Fig. 2, and dye-penetrant inspected. It was then thoroughly cleaned to remove oil, grease, etc., before welding. For the 150°C (302° F) preheat deposit Type 316 stainless steel was used as base for preparing the overlay, while for other deposits Type 304 was used. We do not expect any difference between the behavior of overlays using Types 316 and 304 stainless steel as the base metal.

The oxyacetylene welding process was employed for preparing the AWS RCoCr-A deposits. This process produces high quality deposits relatively undiluted by the base metal, compared to other methods of preparing deposits, and also is more suitable for complex shapes and dimensions. The nature of the flame is an important parameter in determining the structure and properties of the deposit. In the present study, a 3X flame was used; this led to some carbon pick-up in the deposits.

Four deposits were prepared with preheat temperatures of 150, 300, 600 and 900°C (302, 572, 1112 and 1652°F); these are referred to as deposits A, B, C and D, respectively, in further discussions. The deposit A was air cooled to room temperature while deposit D was air cooled to about 450°C (842°F) after deposition to avoid sensitization and then slowly cooled to room temperature in a furnace previously heated to 450°C (842°F). Samples B and C were furnace cooled to room

Table 2—Chemical Composition of AWS RCoCr-A Type Depostis and Bare Rod, WC-%

Element	Bare Rod	Deposit A	Deposit B	Deposit C	Deposit D
Cobalt	63.90	63.25	63.80	62.67	62.53
Chromium	26.59	28.98	26.96	27.56	26.00
Tungsten	6.02	4.13	5.02	5.52	6.13
Carbon	1.22	1.62	1.57	1.64	1.64
Silicon	1.01	0.87	1.04	1.09	0.65
Iron	0.80	—	1.03	0.80	2.36

temperature after deposition. The slow cooling was resorted to to reduce stresses due to welding.

The as-deposited thickness of the overlays was in the range 4-5 mm (0.16–0.20 in.) and bare rods of diameter 4.1 mm (0.161 in.) were used for preparing the overlays. Machining of the overlays was carried out to leave a thickness of the deposit of 2.5 mm (0.098 in.). Dye-penetrant inspection, ultrasonic inspection and hardness measurements were carried out on all the deposits before and after machining. Table 1 shows the hardness of the deposits after machining. Overlays were collected during machining and analyzed for various elements.

Metallurgical Tests

The metallurgical evaluation of the AWS RCoCr-A deposits included metallographic study of the deposits, microprobe scans across the overlays and microhardness measurements along the microprobe traverses.

Metallography. Metallographic investigations were carried out on transverse sections removed from various locations of the Stellited rounds. A mixture of 25 ml glycerine, 25 ml HCl and 10 ml HNO_3 was used as the etchant for microstructural examination. The entire surface of the sample was examined to assess the quality of the deposit. Micrographs were taken of important features of the deposit and also of typical areas of Stellite for each deposit.

Electron Microprobe and Microhardness Examination. Small samples suitable for microprobe analysis were sectioned from the metallographic samples. These were again polished and given a light etch with a mixture of 20 ml HCl, 20 ml H_2O, 10 ml HNO_3 and 0.5g $FeCl_3$ before microprobe analysis.

Samples were analyzed for cobalt, chromium, iron, tungsten and nickel to study the extent of dilution using a CAMECA MS-46 Electron Microprobe Analyser. Microprobe runs were made across the samples starting from the AWS RCoCr-A region and extending well into the base. Microhardness measurements were carried out on these samples along the microprobe scans using a diamond indenter to study the correlation between elemental distribution and the microhardness.

Results and Discussion

The dye-penetrant inspection and ultrasonic inspection carried out after deposition and after machining did not reveal any cracks. Figure 3 shows typical microstructure of Stellite for the different deposits. The dendrites appear to coarsen with higher preheat temperatures. The presence of microcracks in deposits prepared with preheat temperatures of 150 and 300°C (302 and 572°F) is shown, respectively, in Figs. 4A and 4B.

Some porosity was also detected in the deposit with 150°C (302°F) preheat temperature. No cracks were observed with preheat temperatures of 600 and 900°C (1112 and 1652°F). The typical microstructure of interface region of deposits with these preheat temperatures are shown in Figs. 4C and 4D. However, preheating to 600°C (1112°F) tends to sensitize the base material—Fig. 4C. Therefore, a preheat to 900°C (1652°F) which is above the sensitization range should be preferred. In addition to producing a sound deposit, this preheat temperature is also expected to reduce the

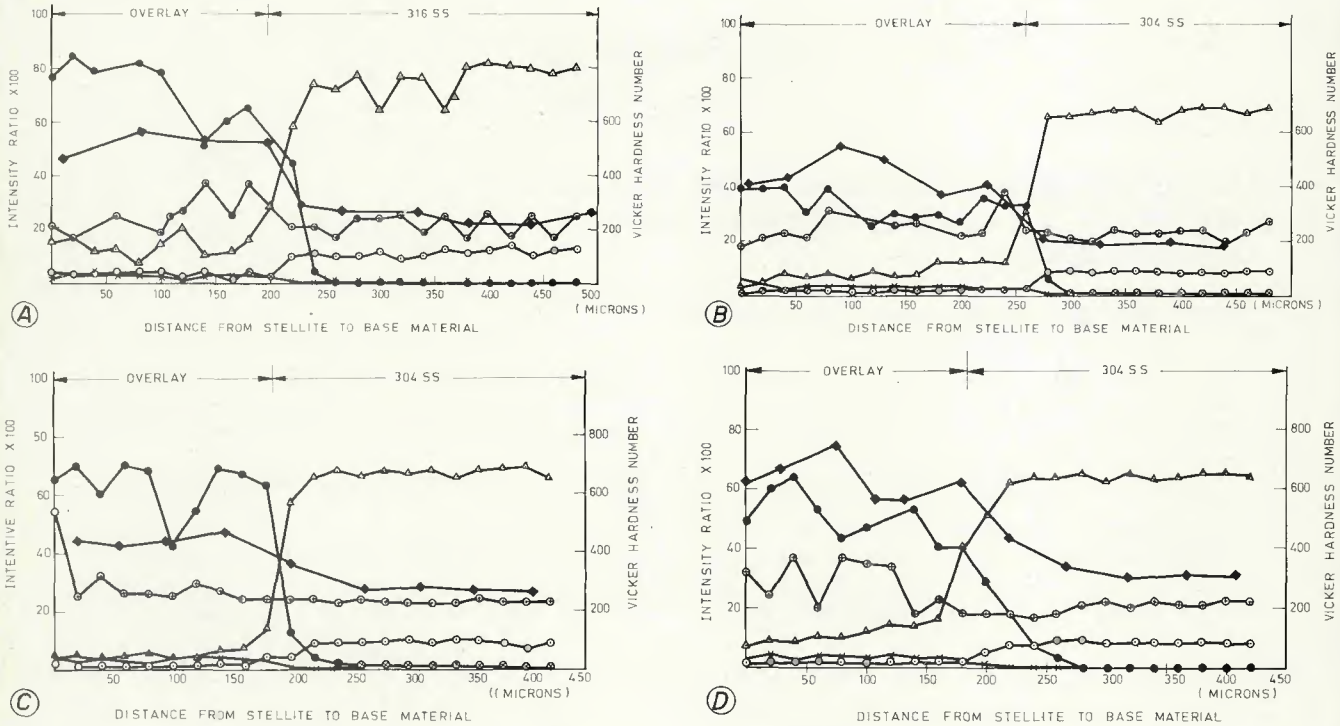

Fig. 5—Graphs showing distribution of elements and microhardness across sample at: A—150°C (302°F); B—300°C (572°F); C—600°C (1112°F); D—900°C (1652°F). Legend: solid black circles—cobalt; open face circles with plus sign—chromium; open face triangles—iron; open face circles with dot in center—nickel; X's—tungsten; solid black squares—microhardness (Vickers hardness number, load = 50 gm)

residual stresses. Sensitization in the base material during cooling is avoided by fast cooling to about 450°C (842°F).

Table 2 shows the results of chemical analysis of the overlays. The chemical analysis of the bare rod used in preparing these deposits is also shown in Table 2. It can be seen that no significant dilution of the overlays has taken place. This is expected when the oxyacetylene process is employed for deposition. The carbon content in the deposits is much higher compared to that in the bare rod analysis. This has resulted from the nature of the flame employed. As the carburizing flame (3X) was used in preparing these deposits, excess carbon would have entered the deposits.

The results of the electron microprobe and microhardness traverses are shown in Fig. 5. The microprobe results are plotted as ratios of X-ray intensities from the AWS RCoCr-A deposit/base to that of pure element for each element analyzed vs. distance along traverses from AWS RCoCr-A to base metal. These intensity plots show distribution of each element in various regions of the sample. As no correction was made for a multi-component system, these intensity ratios should not be considered as representing chemical composition.

An examination of the microprobe results reveals that a higher preheat temperature results in smoother variation of composition across the interface. This would lead to an improvement in the thermal shock resistance. As seen from Table 1, hardness of the deposit is not affected by this small amount of dilution. Figs. 5A and 5D also show that there exists a correlation of microhardness with the cobalt content. These results are similar to the findings of Douty and Schwartzbart.[1]

Conclusion

The results of this investigation reveal that a high preheat temperature is essential to avoid microcracking of the deposits. Microcracks were observed in deposits prepared by employing a preheat of 150 and 300°C (302 and 572°F). Preheating to 900°C (1652°F), followed by air cooling to 450°C (842°F) after deposition to avoid any further sensitization of the base and then furnace cooling to room temperature produced sound deposits without any undesirable features.

Microprobe analysis across the deposits indicated that there is a smoother variation in composition across the interface in deposits with high preheat temperature. Microhardness measurements along the microprobe traverses revealed a correlation of microhardness with cobalt content of the deposits.

Acknowledgments

The authors are indebted to Dr. P. Rodriguez for useful discussions. Thanks are also due to Shri K. G. Samuel for help in metallography, Shri S. Aravamudhan for help in preparing the deposits and Shri S. Venkadesan for microprobe analysis.

References

1. Douty, R. A., and Schwartzbart, H., "Surfacing of 304 Stainless Steel for Liquid Sodium Service," *Welding Journal*, 51(8), Aug. 1972, Research Suppl., pp. 406-s to 416-s.