WELDING RESEARCH

SUPPLEMENT TO THE WELDING JOURNAL, DECEMBER, 1981
Sponsored by the American Welding Society and the Welding Research Council

Ferrite Vein Cracking in Electroslag Welds

Ferrite vein cracking may be avoided by using dried consumables and purging when necessary with a low humidity atmosphere, and by postweld heating to slow or interrupt cooling in the range below 200°C

BY J. A. DAVENPORT, B.-N. QIAN, A. W. PENSE AND R. D. STOUT

ABSTRACT. An investigation of weld metal microcracking in electroslag welds indicated that it is a low temperature hydrogen-induced phenomenon which begins around 125°C (250°F) during postweld cooling. Sources of hydrogen were found to include moist flux, moist atmosphere and the filler wire. Commercially available wire containing 20 ppm hydrogen consistently produced microcracking when welded under a 53°C (128°F) saturated air atmosphere using neutral flux. The amount of external restraint on the weldment was a major factor in the extent of microcracking.

Charpy tests on electroslag weld metal indicated that microcracked and crack-free weld metals have comparable impact energy absorption at −18 and at 5°C (0 and 41°F). The tensile test yield and ultimate strengths were also unchanged by the presence of microcracks but the elongation was reduced.

Introduction

The electroslag welding process is a rapid deposition high heat input process in which the weld is made vertically while it is shielded by a blanket of molten slag. Despite the potential for excellent deposits, problems have been encountered with the integrity of welds in large structures such as bridges. One problem has been the occurrence of microcracks up to 4 mm (0.160 in.) long in the weld metal. The cracks are usually located in the proeutectoid ferrite outlining the prior austenite grain boundaries, and have been identified to be hydrogen-induced cracks (Ref. 1, 6).

The objective of this AISI-WRC project was to reproduce the occurrence of microcracks in electroslag welding in the laboratory and ascertain the influence of various base material, filler wire and flux combinations. A better understanding of the cracking mechanism was sought to reveal methods for alleviating microcracking defects in production weldments.

Experimental Program

Weldment Configuration

Shown in Fig. 1 is the size weldment used for most of the 39 welds made. The only major variation from this configuration was the use of smaller strongbacks (13 mm vs. 51 mm thick) for several "low" restraint weldments.

When a controlled atmosphere was to be injected above the molten slag during welding, a 4.8 mm (3/16 in.) diameter tube was strapped to the guide tube. The saturated atmosphere which the injection tube often carried was produced by bubbling air through a flask of water heated to a selected temperature. The same injection tube arrangement was used for furnishing an atmosphere above the weld of argon or hydrogen from compressed gas cylinders.

All welds were deposited at 575 amperes (A) and 38 volts (V) DCRP. The cooling water was normally left on for 1 to 2 hours (h) after a weld was completed by which time the weldment temperature was below 75°C (167°F). A postweld aging of at least three days at room conditions was observed before sectioning of the weld was begun.

Test Plates and Consumables

Three different grades of 51 mm (2 in.) thick plates were utilized for the experiments. Listed in Table 1 are chemical analyses of the A572-50, A588-B and A36 steel plates used. Table 2 shows the composition and basicity of the three commercial fluxes utilized. CaF_2 was treated as fully basic in the basicity calculations.

The composition of the undiluted deposits for the 2.5 mm (3/32 in.) diameter filler metals used are indicated in Table 3. All of them are commercially available. Filler metal "A" is a cored wire specifically developed for electroslag welding and is intended to give high impact toughness. Filler metal "B" is a solid carbon steel wire while filler metal "C" is a cored wire which closely matches the chemistry of

Paper presented at the 62nd AWS Annual Meeting held in Cleveland, Ohio, during April 5-10, 1981.

J. A. DAVENPORT is a Metallurgist, E. I. du Pont de Nemours Co., Beaumont, Texas; B.-N. QIAN is a visiting engineer at Lehigh University from the People's Republic of China; A. W. PENSE is Professor and Chairman, Department of Metallurgy and Materials Science, and R. D. STOUT is Dean Emeritus-Graduate School, Lehigh University, Bethlehem, Pennsylvania.

Table 1—Base Material Compositions—Manufacturer's Data, Wt-%[a]

	C	Mn	P	S	Si	Cu	Ni	Cr	V	Al	Mo
A588B	0.13	0.95	0.013	0.024	0.31	0.30	0.31	0.51	0.025	0.042	NT
A572-50	0.18	1.17	0.007	0.027	0.23	0.06	0.05	0.08	0.10	–	0.03
A36	0.22	1.08	0.018	0.036	0.25	NT	NT	NT	NT	NT	NT

[a]A588B – heat analysis; A572-50 – heat analysis: A36 – product analysis; NT – no test either made and/or reported.

Table 2—Flux Compositions, Wt-%

Flux	CaO	MgO	MnO	CaF_2	SiO_2	Al_2O_3	TiO_2	K_2O	Na_2O	FeO	P_2O_5	Basicity[a]
A	22.00	6.68	7.23	11.70	34.31	14.37	1.02	0.17	< 0.07	0.60	< 0.05	1.2
B	21.95	0.35	1.68	36.10	12.62	1.13	18.04	< 0.06	0.14	1.04	< 0.05	2.7
C	17.50	0.68	1.68	48.03	< 0.21	21.00	4.33	0.11	< 0.07	1.81	< 0.05	4.1

[a]Basicity = $\frac{CaO + MgO + CaF_2 + Na_2O + K_2O + 0.5\,(MnO + FeO)}{SiO_2 + 0.5\,(Al_2O_3 + TiO_2)}$ (using mole fractions of each compound)

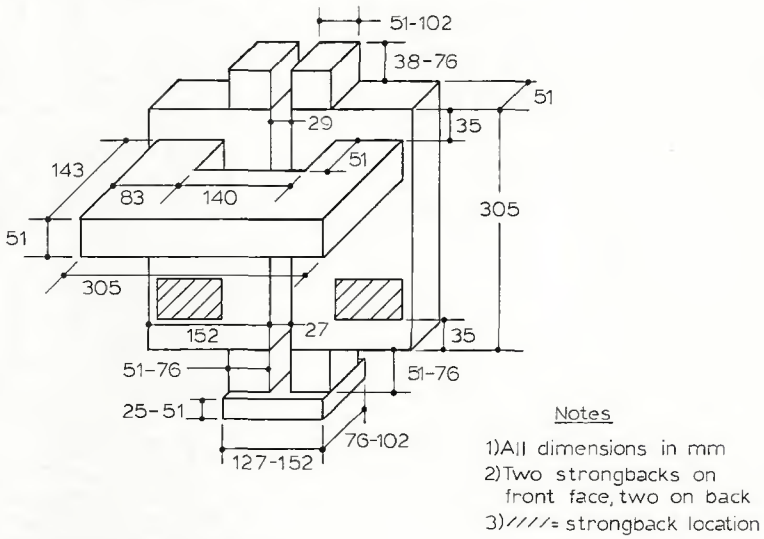

Fig. 1—Standard weldment size

A588 plate. None of the filler metals was copper-coated.

Acoustic Emission Monitoring

Four weldments were acoustically monitored during welding and for 36 h after the welds were completed using Dunegan/Endevco series 3000 equipment. Two transducers were clamped to the face of one 305 × 152 mm (12 × 6 in.) plate for each weld. The transducers were located at the top and bottom of the plate next to the cooling shoe.

For one pair of the welds monitored in the above manner the atmosphere maintained above the slag during welding was dry air for one weld and air of 100% humidity at 53°C (127°F) for the other weld so as to induce different amounts of microcracking. Unprocessed (i.e., spatially non-selective) count rate collection and 100-300 khz transducers were used. Postweld monitoring was not begun until the solidified slag was manually removed from the weld faces.

The second pair of monitored weldments did not have the slag removed so that emissions during the initial postweld period could be monitored. Processed data (i.e., emissions from only between the transducers) were obtained from 400-600 khz transducers. The welding atmosphere was dry or humidified, as it was for the first two welds, to produce different amounts of microcracking.

Mechanical Tests

Charpy V-notch tests were taken from the weld metal of one weld which had a major amount of microcracking and from a second weld which was crack-free. Both welds were deposited in A572-50 plate with filler metal "A" and flux "A". Welding with a hydrogen gas atmosphere above the slag pool was used to induce the microcracking in the cracked weldment. Standard 10 × 10 × 55 mm (0.39 × 0.39 × 2.17 in.) Charpy specimens were utilized. The specimens were located at the quarter thickness location with the V-notch on the bottom.

Tensile tests (12.8 mm, i.e., ½ in. diameter) were conducted on a cracked A588-B weld and an uncracked weld. All the tensile specimens were taken in pairs from the quarter-thickness location.

Microscopic Inspection

The initial weldments were sectioned in numerous locations and orientations to ascertain the sectioning method which would reveal cracking most readily. A series of three horizontal specimens appeared to provide the most reliable measure of overall weldment cracking. These specimens were taken at mid-height and 76 mm (3 in.) from the top and bottom of the plate.

Each of the specimens was polished and etched with 1-2% nital. Examination for cracks was done at 50 diameters with a light microscope. The numbers of cracks observed in a field of 6.45 cm^2 (1 $in.^2$) were qualitatively described as:

- Very slight > 0, < 1
- Slight 1-5
- Moderate 6-10
- Major 11-20
- Severe 20

Cracks longer than 0.8 mm (0.030 in.)

Table 3—Undiluted Filler Metal Baseplate Compositions—Manufacturer's Data, Wt-%[a]

Filler metal	Type	C	Mn	Si	S	P	Cr	Ni	Cu
A	cored	0.07	1.80	0.30	0.015	0.015	NT	NT	NT
B	solid	0.14	1.11	0.45	0.019	0.008	NT	NT	NT
C	cored	0.07	1.10	0.50	0.010	0.010	0.50	0.80	0.45

[a]NT – no data reported.

Table 4—Relation Between Welding Conditions and Degree of Cracking

Welding Conditions	Cracking
Saturated air @ 53°C (128°F), dry flux	Moderate, major or severe
Ambient atmosphere, flux 10% water	Moderate or major
Saturated air @ 40°C (104°F), dry flux	Slight
Ambient atmosphere, dry flux	Very slight or slight
Argon atmosphere, baked wire, dry flux	None

were counted as if they were several cracks, each 0.8 mm long.

Results and Discussion

Moisture Additions to the Atmosphere

The use of hydrogen or moisture-containing atmospheres above the molten slag during welding induced microcracking in the ferrite veins. Microcracking could also be induced by utilizing a wet flux (10% water by weight). Comparison of the cracking obtained in numerous welds, all of which utilized the high restraint configuration, neutral flux ("A") and the high Mn cored wire ("A"), relates the degree of cracking to the supply of hydrogen as indicated in Table 4. The results apply to both A572-50 and A588-B base materials. A limited number of tests indicated that welds in A36 steel follow these same cracking trends. Complete data on the test welds are listed in Table 5.

A hydrogen atmosphere imposed on a low restraint weldment in the early stages of the research produced a major amount of cracking, while a saturated air or wet flux weldment cracked only slightly under the same low restraint conditions. The hydrogen atmosphere weld demonstrated that the form of the hydrogen (free or combined) was not critical to the formation of cracks.

Figure 2 shows weld metal microcracks typical of those induced by a moist atmosphere, wet flux or a hydrogen gas atmosphere. The moisture (i.e., hydrogen) induced cracking that resulted bears a strong resemblance to that obtained by A. E. Flanagan and co-workers (Ref. 2-4) in the shielded metal arc welding process. Their work demonstrated the ability to obtain low temperature hydrogen-induced microcracking by simply wetting low-hydrogen electrodes, analogous to a moisture-laden flux in the present work.

Restraint

The amount of restraint imposed on the weldment to resist the plates pulling together was varied by using different strongback arrangements. Measurements were taken of punch marks placed 130 mm (5.12 in.) apart on the face of the plates straddling the centerline, at the top and bottom of the weldment. Shown in Table 6 is the variation in contraction obtained.

The restraint was found to be a major factor determining the amount of microcracking. An increase in cracking from "slight" to "major" was brought about in several cases by using high rather than low restraint. This is consistent with work recently reported by Konkol and Domis (Ref. 1).

Base Material

The base material melted in electroslag welding comprises 40–50% of the weld deposit. The balance is made up of the guide tube (some 10%) and the filler metal. The A588-B base plate weld metals had a much finer austenite grain structure than the A36 or A572-50 welds using the same filler metal ("A"). The prior austenite grains were less clearly outlined by ferrite in the A588-B than with the A572-50 or A36 plate and there was more ferrite internal to the A588-B austenite grains.

The base material influence on microcracking is less well defined than its influence on austenite grain size. There was a range in cracking of A572-50 welds (welds 2A28 and 2A31) from "moderate" to "severe" when welded under identical conditions. The "moderate" cracking of A588-B welds (welds 8A16 and 8A17) made under similar conditions (i.e., filler metal "A", dry flux "A", high restraint, saturated 53°C atmosphere) fell within the range of the A572-50 results. Hence the A588-B cracking level must be regarded as roughly comparable to that obtained in the A572-50, if the total number of cracks is the criterion for judging crack severity. Since the A588-B cracks were often shorter, the A572-50 tended to have a greater total crack length.

A36 base material showed "moderate" cracking when welded (weld 6A22) under similar conditions as the A572-50 and A588-B welds compared above. The A36 and A572 weld metal grain sizes were roughly comparable and their cracking by either total crack length or number of cracks was roughly equivalent. Hence, A36 and A572-50 were possibly more crack susceptible than A588-B by the total crack length criterion.

Flux

The tendency reported elsewhere (Ref. 1, 9) for greater cracking as the flux basicity is increased was not shown in

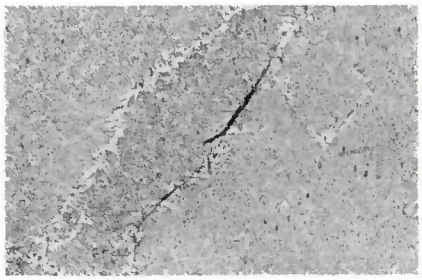

Fig. 2 — Typical weld metal microcracks. Nital etch, X50 (reduced 35% on reproduction)

these experiments. There was apparently more hydrogen available in welds using the high basicity "B" and "C" fluxes than in "A" flux weldments; it manifested itself as "wormhole" porosity rather than as cracking.

It was found that 10% moisture in "B" flux induced porosity with moist or dry atmospheres (welds 8B12 and 8B13). Flux "B" produced significant cracking with or without porosity with a 53°C (127°F) saturated atmosphere (welds 8B13 and 8B23), and flux "C" caused cracking, with some porosity, using a 40°C (104°F) saturated atmosphere (weld 2C24). Dried flux "C" with low restraint and an ambient atmosphere produced a crack-free and porosity-free weld. Neutral flux "A" did not produce porosity under any conditions.

Filler Metal

The three filler metals utilized in this work had the compositions noted in Table 3. The use of filler metal "B" with A36 plate and filler metal "C" with A588-B plate both under a 53°C (127°F) saturated atmosphere using flux "A" produced no cracking (welds 8A39 and 6A41). If microalloying was a factor in the microcracking, these two welds should show different cracking propensities because of widely different base material and filler metal microalloying. When filler metal "A" was substituted in two additional welds on these steels, moderate cracking resulted.

The possibility that the filler metal could contribute to the weld metal hydrogen was suspected from these results. The results of hydrogen analyses on several sections of each filler metal (50 mm, i.e., 2 in. length of filler metal per analysis) are listed in Table 7. Filler metal "A" contained significantly more hydrogen (20 ppm) than filler metals "B" or "C".

Weld 2A25 was made with filler metal "A" which had been held in a 50-60°C (120-140°F) saturated atmosphere for two days prior to welding. No additional cracking was obtained beyond that induced by filler metal "A" as received from the manufacturer. The filler metal was apparently saturated with hydrogen-bearing compounds at normal atmospheric conditions.

Table 5—Compilation of Data on the Test Welds (51 mm Strongbacks, 575 Amperes in All Cases, Filler Metal A Except Where Noted)[a]

Weld	Base Metal	Flux	Atmosphere	Cracking	Notes
8A07	A588	A (+10% H_2O)	Ambient	None	
8A08	A588	A (dry)	Ambient	None	
2A09	A572	A (dry)	Ambient	None	
8A10	A588	A (dry)	Air sat. @ 53°C	Slight	
8B12	A588	B (+10% H_2O)	Ambient	None	Severe wormholes
8B13	A588	B (dry)	Air sat. @ 53°C	Moderate	
8C14	A588	C (dry)	Air sat. @ 53°C	None	Severe wormholes
8C15	A588	C (dry)	Air sat. @ 53°C	None	
8A16	A588	A (dry)	Air sat. @ 53°C	Moderate	
8A17	A588	A (dry)	Air sat. @ 53°C	Major	13 mm slag depth
2A18	A572	A (dry)	Air sat. @ 53°C	Major	
8A19	A588	A (+10% H_2O)	Ambient	Major	
6A20	A36	A (dry)	Air sat. @ 53°C	None	Filler metal B
8A21	A588	A (dry)	Air sat. @ 53°C	None	Filler metal C
6A22	A36	A (dry)	Air sat. @ 53°C	Moderate	
8B23	A588	B (dry)	Air sat. @ 53°C	Severe	Also 200 mm wormhole
2C24	A572	C (dry)	Air sat. @ 40°C	Slight	Also 100 mm wormhole
2A25	A572	A (dry)	Ambient	V. slight	Filer metal held two days in 55° sat. air
2A26	A572	A (dry)	Air sat. @ 40°C	Slight	
2A27	A572	A (dry)	Ambient	V. slight	Acoustic emission test
2A28	A572	A (dry)	Air sat. @ 53°C	Severe	Acoustic emission test
2A30	A572	A (dry)	Ambient	V. Slight	Acoustic emission test
2A31	A572	A (dry)	Air sat. @ 53°C	Moderate	Acoustic emission test
2A32	A572	A (dry)	Air sat. @ 53°C	None	Reheat from 195°C. 12 h @ 300°C
2A33	A572	A (dry)	Air sat. @ 53°C	None	Cooling interrupt at 145°C for 60 h
2A34	A572	A (dry)	Air sat. @ 53°C	Slight	Cooling interrupt at 105°C for 72 h
2A35	A572	A (dry)	Air sat. @ 40°C	Slight	Tests on 610 mm wide plates
2A36	A572	A (dry)	Argon	Slight	
2A38	A572	A (dry)	Argon	None	Filler metal baked @ 425°C
8A37	A588	A (dry)	Air sat. @ 53°C	Moderate	
8A39	A588	A (dry)	Air sat. @ 65°C	None	Filler metal C
6A41	A36	A (dry)	Air sat. @ 65°C	None	Filler metal B
8A42	A588	A (+10% H_2O)	Air sat. @ 65°C	None	Filler metal C
8A43	A588	A (+10% H_2O)	Hydrogen	Slight	Only bottom section cracked
2A44	A572	A (dry)	Air sat. @ 53°C	Moderate	Strongbacks cut out after 2 h
2A45	A572	A (dry)	Air sat. @ 65°C	Slight	Filler metal baked @ 425°C
2A46	A572	A (dry)	Air sat. @ 20°C	Slight	Filler metal baked @ 425°C
2A47	A572	A (dry)	Air sat. @ 53°C	Major	Filler metal B electrolytically H charged
2A48	A572	A (dry)	Air sat. @ 53°C	None	Filler metal B

[a]F = (9/5°C + 32, and inches = mm/25.4.

The ability of filler metal "A" independently to provide sufficient hydrogen to induce cracking, without any atmospheric contribution, was verified by two test welds. The first (weld 2A36) was made under an argon atmosphere. The "slight" cracking obtained was the same as that obtained in matching welds exposed to the laboratory atmosphere. The high hydrogen content of the filler metal explains why cracking could not be eliminated only by controlling the flux and atmosphere moisture levels. This residual cracking under ambient atmosphere and dry flux was not reported by U. S. Steel in its work; here a different wire which was not cored was used (Ref. 1).

Table 6—Transverse Weldment Contraction[a]

	Light restraint[b]	Heavy restraint[c]
Top	2.5 – 3.0mm (0.100 – 0.120 in.)	1.8 – 2.0 mm (0.073 – 0.079 in.)
Bottom	0.8 – 1.5 mm (0.030 – 0.060 in.)	1.0 – 1.3 mm (0.039 – 0.050 in.)

[a]Contraction measured at a nominal 130 mm (5 in.) spacing across the vertical centerline, 13 mm (½ in.) from the top and bottom of the 305 × 152 mm plates.
[b]Light = four 13 mm (½ in.) thick strongbacks.
[c]Heavy = four 51 mm (2 in.) thick strongbacks.

A second weld (weld 2A38) further verified that as-received wire "A" was able to induce cracking. The wire was baked at 425°C (800°F) for 1¾ hours and then used within 25 minutes (min) of removal from the furnace for making a weld under an argon atmosphere. No cracking was obtained, and it was found that the hydrogen content was lowered from 20 to 2 ppm in the filler metal by the baking.

It was earlier determined that filler metal "A" would induce cracking using a

Table 7—Filler Metal Hydrogen Analysis, ppm

Filler metal	Construction	Directly from spool	Coating manually removed	Surface cleaned and then baked 1½ hours @ 800°F (427°C)
A	Cored	14.3	16.6	2.9
		14.9	15.6	1.0
		20.7	17.8	
		21.4	16.1	
		19.4	(16.5 avg.)	(2.0 avg.)
		19.7		
		(18.4 avg.)		
B	Solid		8.9	
		12.3	8.6	
		11.8	9.1	(no tests)
		(12.0 avg.)	(8.9 avg.)	
C	Cored	4.6	10.6	2.4
		4.8	16.6	2.1
		12.2		
		13.7	(13.6 avg.)	(2.2 avg.)
		(8.8 avg.)		

neutral flux and a 53°C (127°F) saturated atmosphere. Filler metals "B" and "C" did not induce cracking under the same circumstances. The microalloying effect of different filler metals on the hydrogen cracking susceptibility, if there are any, were overshadowed by the wire hydrogen content.

An additional experiment (welds 2A47 and 2A48) in which filler metal B was charged electrolytically with hydrogen before welding on A572 plate, produced major cracking, while the as-received filler metal produced none. This result proved that hydrogen carried in by the filler metal was especially effective in inducing vein cracking.

It is reasonable to assume that the combination of atmosphere hydrogen and wire hydrogen must reach a certain critical level, depending on other parameters (e.g., cooling rate) to cause cracking. Filler metals "B" and "C" could be expected to induce cracking with a hydrogen potential in the atmosphere greater than that required for "A" but less than that required for a baked filler metal having 2 ppm hydrogen.

Crack Morphology

With rare exception the cracks completely followed the proeutectoid ferrite along the prior austenite grain boundaries. The distribution of cracks from the top to the bottom of the weld was approximately uniform. All of the cracks apparently initiated in the ferrite with < 5% running out into the pearlite matrix.

Cracks departing from the proeutectoid ferrite were more common with the fine grained (prior austenite) A588-B than with A572-50 or A36. The crack length varied from 0.13 mm to 3.8 mm (0.005 to 0.150 in.). The cracks were always located in the weld metal at least 4.8 mm (3/16 in.) inside of the fusion lines and cooling shoe surfaces. This is where a residual tensile stress would be anticipated. Flanagan's work with hydrogen microcracking in shielded metal arc welding yielded a similar result with respect to crack location (Ref. 2).

In a marginal cracking situation with A572-50 base material, cracks were found in the coarse austenite grain boundaries rather than the fine grain boundaries which were also present. This trend was evident in all of the A572-50 welds which had "slight" or "very slight" cracking. The minimal amount of coarse grains in A588-B did not allow observation of this same preference. The marginal condition cracks, again mostly in A572-50 base, also tended to lie parallel to the fusion lines, as viewed in a horizontal section.

Acoustic Emission

The purpose of acoustic emission monitoring was to determine when cracking occurs as the weldment cools during the postweld period. The results of the first pair of monitored welds indicated that the "severely" cracked weld exhibited a higher emission rate than the "good" (very slightly cracked) weld only in the first 20 min after the weld was completed but showed a lower rate thereafter.

Figure 3 shows the results of the second pair of monitored welds (2A30 and 2A31). The results are very similar in that the "cracked" weld again had a comparable or higher emission rate only during the initial postweld period. The total emissions after 36 h were higher for the good weld by 15–45% in both pairs.

The results, which are consistent for both pairs of welds, are apparently indicative of a noise source other than weld metal cracking. Slag cracking is the most likely candidate even for the first pair of welds in which the majority of slag was manually removed with a chipping hammer before postweld monitoring was begun. Another possible noise source was plastic flow in the metal near stress raisers such as the strong-back filler welds. The use of higher frequency transducers with the second pair was apparently unsuccessful in eliminating pickup of slag cracking noise.

Initiation of Cracking

The inability of the acoustic emission work to provide information on the start of vein cracking in the weld metal led to another approach involving the interruption of cooling of a series of welds. The welds were made with A572-50 plate, flux "A" (dry), filler metal "A" and a 53°C (127°F) saturated air atmosphere. Earlier welds made under these conditions had shown "moderate" to "severe" microcracking.

Each succeeding weld in the series was allowed to cool to a lower postweld temperature before cooling was interrupted by placing the weld in a furnace for at least 12 h to reheat or to maintain the selected minimum temperature. Earlier work by others had shown that it was possible to eliminate cracking by immediately heating to 300°C (572°F) after welding (Ref. 1, 5). The last weld of the series was one which was allowed to cool to a low enough temperature to allow cracking to take place. It is known that maintaining an elevated postweld temperature allows the hydrogen to diffuse out of the weld metal and thereby prevents cracking.

In the first test (weld 2A32), weld

Table 8—Charpy V-Notch Tests[a]

Weld	Cracking	Tests at −18°C (0°F) Top Section	Tests at −18°C (0°F) Bottom Section	Tests at 5°C (40°F) Top Section	Tests at 5°C (40°F) Bottom Section
2A04	Major	28 Joules	26 Joules	43 Joules	53 Joules
(A572-50)		(21 ft-lb)	(19 ft-lb)	(32 ft-lb)	(39 ft-lb)
2A09	None	27	28	52	41
(A572-50)		(20)	(21)	(38)	(30)

[a]Charpy test values shown are averages of three tests after excluding high and low values from a set of 5 tests; standard deviation of the impact values is 3 – 8 joules (2–6 ft-lb); cracking in 2A04 induced by a hydrogen atmosphere.

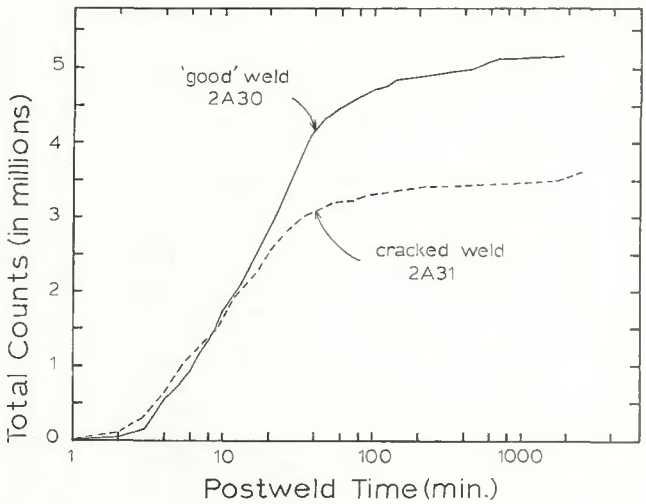

Fig. 3 — Cumulative postweld emissions for welds 2A30 and 2A31

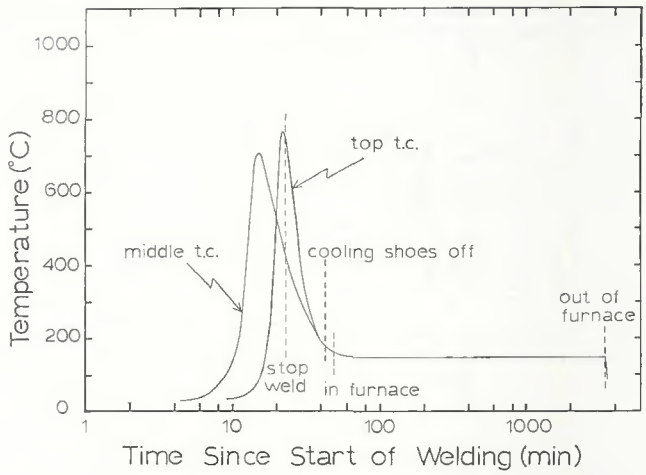

Fig. 4 — Thermal history — weld 2A33 — no weld metal cracks

cooling was interrupted at 195°C (383°F) and the weld was held at 300°C (572°F) for 12 h. No cracking occurred. Maintaining a minimum weldment temperature of 145°C (293°F) by holding in a furnace for 60 h also eliminated cracking (weld 2A33). Figure 4 shows the thermal history of this weldment measured 25 mm (1 in.) from the inside of the plate edge by chromel-alumel thermocouples located at mid-thickness. The temperature was monitored at mid-height and 25 mm (1 in.) from the top of the plate.

A similar time-temperature record was obtained for weld 2A34 except it was held at a minimum temperature of 105°C (221°F) instead of 145°C (293°F). It showed "slight" cracking.

The results indicate that cracking did not occur until the weld cooled below 145°C (293°F). An estimate of the cracking threshold for this weldment configuration (i.e., restraint), hydrogen level and cooling rate is in the vicinity of 125°C (257°F), approximately 25 min after welding was completed.

Since the hydrogen diffusion rate is both time and temperature dependent, a different cooling cycle would change the threshold temperature. An increase in hydrogen or restraint might be expected to shift the temperature to a higher value. A difference in one or more of these parameters may account for Kunihiro and Nakajima's reported threshold of < 100°C (212°F) in their electroslag weldments (Ref. 6).

The time dependence of the hydrogen diffusion and its effect on the cracking has been demonstrated in shielded metal arc welds. Cracking was prevented by either delaying cooling so that the hydrogen could diffuse out of the weld metal as done here, or by immediate water quenching to ambient temperature after welding so as to prevent hydrogen concentration (Ref. 3, 4).

A viable way of minimizing cracking in production electroslag welds may be to decrease the cooling rate. Some mixed success has been obtained by other investigators in decreasing the cooling rate by decreasing the cooling shoe effect. Use of graphite or solid copper cooling shoes, which allow slower cooling, has decreased the cracking in some cases (Ref. 1, 6). However, use of 60°C (140°F) cooling water in conventional cooling shoes was not effective in retarding cracking (Ref. 1).

The results of the postweld heat treatments indicate that cracking initiated at about 125°C (257°F), 25 min after welding was completed. How quickly the cracking proceeds after initiation was not determined. An additional weld (weld 2A44) gave a clue in this direction. The weld was made under conditions identical to several other welds which had showed "moderate" to "severe" cracking. The only difference was that the strong backs were dismantled to remove the restraint two hours after welding (when the weld had reached 80°C or 176°F) while the others had been under restraint for three days.

The cracking observed in the shortaged weld was "moderate." This indicates that welds subjected to the thermal history used here undergo a significant percentage (> 25%) of their cracking within a few hours of the weld finish but by no means all of it. This result is consistent with work on thick plate shielded metal arc welds (Ref. 8) or other electroslag weldments (Ref. 5); it indicated that some microcracking may continue for several days after the weld is completed.

Mechanical Tests

In Table 8 are the results of Charpy V-notch tests on cracked and uncracked weld metal made with A572-50 base material, filler metal "A" and flux "A". There is essentially no difference in the impact energies measured. However, examination of the specimen fracture surfaces indicated that the microcracked weld metal developed a much more faceted fracture surface. The facets may originate from vein cracks which opened when the specimen was broken. The failure of the cracks to decrease the energy absorbed suggests that the crack size was too small and the orientation was ineffective. The results indicate that microcracking of the severity present in this study cannot be revealed by the standard Charpy test.

Hydrogen-induced microcracking was observed to reduce the specimen elongation in a tensile test without substantially effecting the yield and tensile strengths. In tests of cracked (induced by wet flux) weld metal in A588-B steel the elongation decreased from 29 to 22% in a 51 mm (2 in.) gage length compared to crack-free weld metal. The cracked tensile specimens also clearly showed "fish eyes" on the fracture surface and cracks which opened up on the surface in the necking region. These tensile test results are in agreement with work done by Nishio, Hiromoto and Inoue on electroslag weld metal (Ref. 5).

Weldment Thermal Cycle

The test welds discussed so far were all produced in 152 mm (6 in.) wide plates. Cooling water was left running for 1 to 2 h after the weld was completed. How the thermal history of these welds differed from a production weld in a very wide plate, which would not have the cooling shoes left on, was of interest. Accordingly, two 610 mm (24 in.) wide plates were welded under conditions which had been shown to give some microcracking.

Figure 5 shows the thermal records of the wide plate weld and a normal size laboratory weld. As would be expected, the wide plate weld cools slightly quicker than the narrow plate case. Leaving the cooling shoes on for the narrow plate, however, produces a more rapid cooling at low temperatures than that shown by the wide plate. Since the wide plate

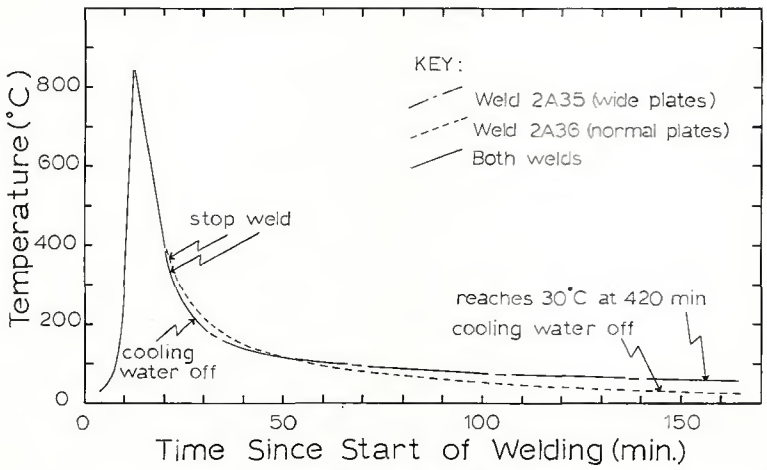

Fig. 5 — Wide and normal plate thermal histories — midheight. Midthickness = 25 mm (1 in.) from the inside edge

reaches the cracking threshold of 125°C (257°F) slightly quicker, but then cools more slowly from 100°C (212°F) it would be difficult to know whether it is more or less susceptible to microcracking. In any event, the cracking in wide plate weld 2A35 and a similar narrow plate weld was the same ("slight"). Hence it is concluded that the results of this research work would likely have been similar if 610 mm (24 in.) wide plates had been utilized throughout.

Summary

The results of this investigation clearly indicate that hydrogen-induced cracking can be caused by a combination of high restraint and moisture. Moisture from a saturated air atmosphere between 40 and 53°C (104 and 127°F) was found to cause significant cracking when used with neutral flux, high restraint and a filler wire containing 20 ppm hydrogen. The filler metal apparently supplemented the atmospheric hydrogen to cause significant cracking although it resulted in only minor cracking when used with an inert or ambient atmosphere. It is expected that cracking could be induced by various combinations of wire, restraint severity and moisture contents in the air.

The hydrogen-induced cracking phenomenon was found to initiate at a temperature of about 125°C (257°F) during post-weld cooling. While this temperature will depend on the specific restraint and hydrogen present, it is quite clear that microcracking begins at a low temperature, at least 20 min after a weld is completed. These experiments further showed that a significant portion of the cracking (> 25%) may occur within a few hours after reaching ambient temperature.

The mechanical tests performed indicated that the level of microcracking produced in the weld metal decreases the tensile test elongation, but not the tensile yield and ultimate strength or the Charpy V-notch toughness.

The possibility was raised by the test results that finer austenite grained material, such as observed in the A588-B welds is less susceptible to microcracking than the larger grain size produced in the welds made in A572-50 or A36 steel.

Unexplained by this work is the question of why the cracking occurs in the proeutectoid ferrite which has a diamond pyramid hardness of approximately 115 as opposed to the pearlite/bainite/ferrite microstructure which has a hardness of approximately 200 (Ref. 6). Undoubtedly cracking is related to the high solubility of hydrogen in the austenite and its inevitable rejection to discontinuities upon austenite transformation, but the mechanism of cracking in these welds is as inexplicable as similar cracking found in shielded metal arc weld metal.

This research has demonstrated that control over vein cracking is possible by observing certain precautions. These include utilizing:

1. Filler metal with a limited hydrogen content.
2. Reduced cooling by preheat/postheat to maintain the weldment temperature > 125°C (257°F) for several hours after welding.
3. Atmosphere control, perhaps with an inert shield, when extreme humidity is encountered.
4. Dried flux of moderate basicity.

Acknowledgment

The authors are grateful to the American Iron and Steel Institute for sponsoring the investigation reported here and to members of the Weldability Committee of the Welding Research Council for technical guidance.

References

1. Konkol, P. J., and Domis, W. F. 1979. Causes of grain boundary separations in electroslag weld metals. *Welding Journal* 58 (6): 161-s to 167-s.
2. Flanagan, A. E., and Kaufman, M. 1951. Microcracks and the low temperature cooling rate embrittlement of welds. *Welding Journal* (30) 12: 613-s to 622-s.
3. Flanagan, A. E.; Bochrsky, S. I.; and McGuire, G. B. 1950. Effect of low temperature cooling rate on the ductility of arc welds in mild steel. *Welding Journal* 29 (9): 459-s to 466-s.
4. Flanagan, A. E., and Micleu, T. 1953. Relation of preheating to embrittlement and microcracking in mild steel welds. *Welding Journal* 32 (2): 99-s to 106-s.
5. Nishio, Y.; Hiromoto, Y.; and Inoue, K. *Study on hydrogen behavior and preventing welding cracks in electroslag weld zones.* IIW Document XII-J-48-76.
6. Kunihiro, T., and Nakajima, H. 1974. Microcracking in consumable nozzle electroslag weld metal. *Proceedings of Japan-U.S. seminar on significance of defects in structures.*
7. Flanagan, A. E., and Saperstein, Z. P. 1956. Isothermal studies on the weld metal microcracking of arc welds in mild steel. *Welding Journal* 35 (11): 541-s to 556-s.
8. Nishio, Y.; Yoshida, Y.; and Miura, Y. 1976. *A study of the behavior of diffusible hydrogen and weld cracking in thick weldments.* IIW Commission XII document.
9. Nakano, S.; Tamaki, K.; and Tsuboi, J. *Hydrogen cracking in ESW weld metals.* IIW Document XII-J-49-76.