Cinematography of Resistance Spot Welding of Galvanized Steel Sheet

Preweld and postweld current modification have a significant effect on nugget quality

BY C. T. LANE, C. D. SORENSEN, G. B. HUNTER, S. A. GEDEON AND T. W. EAGAR

ABSTRACT. The effects of preheat, postheat, upslope, and downslope current modifications on the resistance spot welding of galvanized steel sheet are analyzed using high-speed cinematography. Correlations between the timing of the current modification and the observed physical phenomena throughout the weld process are discussed. In addition, the duration of current modification compared to the total weld time is examined in terms of relative effectiveness for improving weldability.

The melting sequence of the zinc coating at the electrode and faying interfaces was found to vary with the type of current modification used. A mechanical seal of deformed iron was found to help constrain the molten material between the electrode tips, even when peripheral melting occurred. The correlation found between the motion of the molten nugget and the pulsing of the current is described. In addition, it is shown that preweld current modification led to slower, more uniform weld nugget formation, which in turn should lead to improved weldability.

Introduction

Resistance spot welding is one of the quickest and cleanest welding processes available. Although it is greatly favored in the automotive industry, the recent increased use of galvanized steel has produced a number of problems. Current modification has emerged as one of the more promising ways of improving the weld process for galvanized steel. Two of the more common forms of weld current modification are preheating and postheating, and upsloping and downsloping—Fig. 1. A low current, relative to the weld current, can be used to either preheat the metal before the weld or delay its cooling afterwards. Sloping is a similar process, but uses a ramped current to control the heating and cooling. Gedeon, *et al.* (Ref. 1), have shown the beneficial effects of these forms of current modification on the weldability of galvanized sheet steels.

Commonly, resistance welding research has concentrated on the macroscopic evaluation of full-size nuggets or overall heat generation models (Refs. 2, 3), rather than the microscopic mechanisms of nugget formation (Refs. 4, 5). In one such study of nugget formation, Kaiser, *et al.* (Ref. 6), observed a molten zone around the periphery of some welds during nugget initiation. Kaiser, *et al.* (Ref. 6), and Nied (Ref. 7) both explained this phenomenon in terms of the greater deformation caused by the absence of a state of triaxial at the periphery of the truncated cone electrodes. Holm (Ref. 8) points out, however, that greater peripheral heating can be caused by the current constriction of a truncated cone electrode. Recent work by Gedeon (Ref. 9) showed that this zone can be more developed in welds with current modification than in those without it. He postulated that a mechanical seal of deformed iron helped constrain this molten zone and nugget between the electrode tips, thus preventing expulsion and increasing the range of acceptable welding current. It was also noted that current modification affected other aspects of weld nugget formation as well. To investigate these observations directly, a study was initiated using methods inspired by the high-speed cinematography work of Upthegrove and Key (Ref. 5), who examined welds made with no current modification. The following topics were examined in the present study:

1) The phenomena associated with the nugget formation during a weld, using no current modification.

2) The manner in which preweld and postweld current modification affect the nugget formation during welding.

3) The differences in nugget formation between the various forms of preweld and postweld current modification during the welding process.

KEY WORDS
Cinematography Study
Current Modification
High Speed Movies
Galvanized Sheet
Preweld Current
Postweld Current
Preweld Effects
Postweld Effects
Resistance Spot Weld
Spot Welding Movies

C. T. LANE, C. D. SORENSEN, G. B. HUNTER, S. A. GEDEON and T. W. EAGAR are with the Materials Processing Center, Massachusetts Institute of Technology, Cambridge, Mass.

Equipment

The equipment used for this study is divided into three groups: the welding system, the camera system, and the lighting system. These systems were adapted to view the vertical cross-section of the weld nugget as it forms and grows. Although the physical constraints for this cross-section are not those of a normal spot weld, it is expected that the heat generation and nugget formation viewed will not be significantly different from those of a normal weld.

The welding system consisted of a 75 kVA Taylor-Winfield spot welding machine with a Technitron 7000 series synchronous controller. Class 2 truncated-cone electrodes were adapted by milling them to half-sections, as shown in Fig. 2. The weld schedule settings (current, time, force) for 0.050-in. (1.3-mm) hot-dipped galvanized steel sheet were chosen to correspond to a 0.22-in. (5.6-mm) weld nugget without expulsion when welded using regular electrodes. These settings were then modified to provide an equivalent weld when using the half-section electrodes. Reducing the area of contact

by half doubled the resistance, so for this constant power machine, the current was reduced by a factor of $2^{1/2}$ to obtain the same power density in the weld (see Appendix). Likewise, the full weld force of 4 kN (900 lb) was halved to maintain a constant pressure. The final weld settings are shown in Table 1.

The camera system consisted of a Red Lake Model I HYCAM rotating prism camera. Mounting the camera to a translation device on an adjustable height table allowed proper vertical and horizontal positioning—Fig. 3. The lens assembly was composed of a 90-mm extension tube, a Canon 135-mm lens, and a Tiffen 52-mm SKY-1A filter. The film (Eastman Ektachrome Video News Film High Speed 7250—Tungsten ASA 400) was shot at f/4.8 and 2400 frames per second. Adjustable time delay relays, triggered by the closing of the electrodes, started the camera at the proper time.

A useful feature of the camera system was a pair of light emitting diodes (LED's), used as timing indicators. These LED's were connected to the Technitron controller to provide reference lights, indicating the initiation and duration of the preweld current and the full weld current. The yellow LED that appeared to the left of the film frame indicated the initiation and duration of preweld current; the red LED that appeared to the right provided the same indication for the weld current.

The lighting system was constructed around a vertically mounted GE 120-V 300-W model ENG projection lamp with a built-in parabolic reflector. A cooling fan was used to extend the life of the lamp. A 50-mm (1.95-in.) diameter optical grade aluminum mirror redirected the light, and a 125-mm (4.92-in.) diameter biconvex lens, with a focal length of 30 mm (1.18 in.) and a fixed stop of 2.4, focused this illumination.

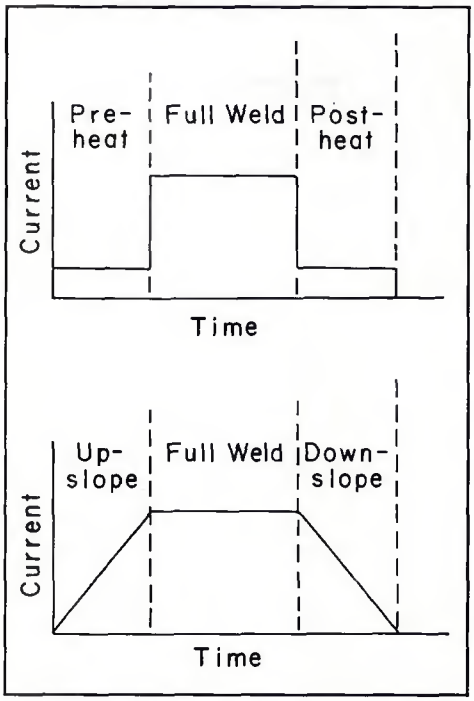

Fig. 1—Diagrams showing heating (above) and sloping (below) current modifications

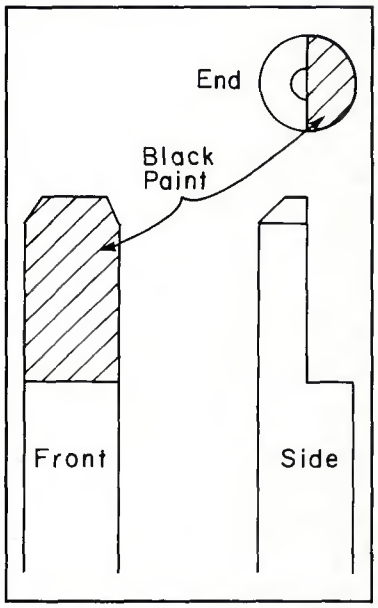

Fig. 2—A half-section truncated-cone electrode

Experimental Procedure

Regular spangle galvanized steel sheet, 0.050 in. (1.3 mm) thick, was cut into 1- × 2-in. (25.4- × 50.8-mm) test coupons. Pairs of these coupons were tack welded together at the corners to insure proper alignment with each other. To provide diffuse reflection and avoid glare, the front face of each coupon pair was ground flat with 240X abrasive and the electrode faces were painted semiflat black. The scene viewed by the camera system is shown in Fig. 4. To further reduce glare, the axis of the light source

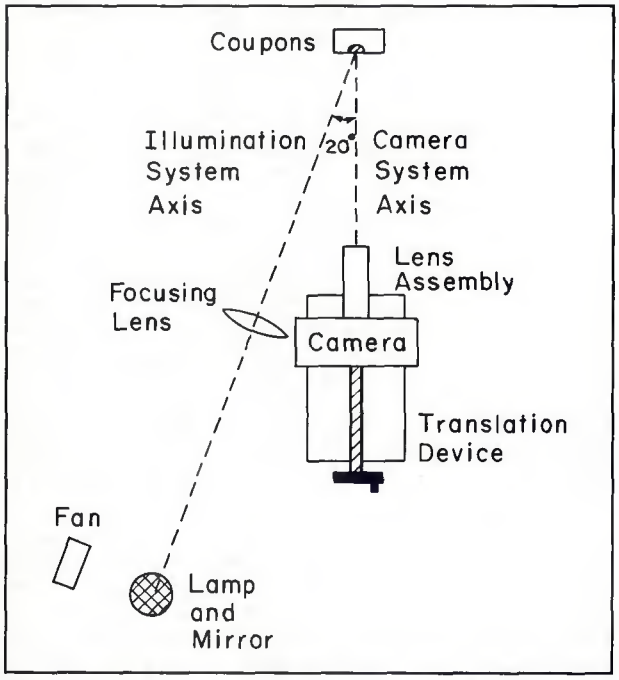

Fig. 3—Schematic diagram indicating the placement of the camera and illumination systems

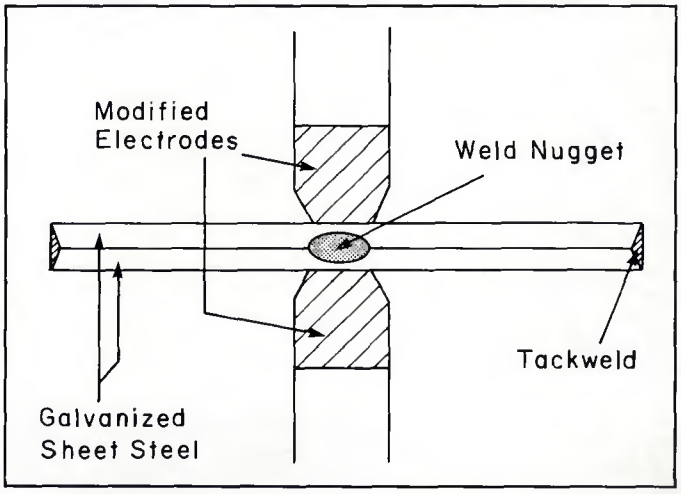

Fig. 4—Vertical cross-sectional view of the weld. The camera views just the area around the nugget and electrode tips

Table 1—Weld Schedules

Weld Number	Weld Current (% Low Tap)	Current Duration (cycles)				
		Preheat	Upslope	Weld	Downslope	Postheat
1	54	0	0	24	0	0
2	54	0	12	24	0	0
3	54	12	0	24	0	0
4	54	24	0	24	0	0
5	54	0	24	24	0	0
6	54	0	0	24	12	0
7	54	0	0	24	0	12
8	54	0	0	24	0	24
9	54	0	0	24	24	0
10	54	0	12	24	12	0
11	54	12	0	24	0	12
12	70	0	0	8	0	0
13	70	4	0	8	0	0
14	70	8	0	8	0	0
15	70	0	8	8	0	0
16	70	0	4	8	0	0
17	70	0	0	10	0	0

was situated 20 deg from the axis of the camera, which was perpendicular to the face of the electrodes—Fig. 3.

After they were machined and painted, the electrodes were placed in the electrode holders with the flat faces perpendicular to the HYCAM. Fine focusing was done with the translation stage and a ground glass focusing element. During filming, a compressed air stream directed at the weld prevented zinc fumes from obscuring the weld process and protected the camera lens from expelled material.

Results

Weld 1 (Table 1) was made with parameters that are the standard against which the rest of the welds in this study are compared. This 24-cycle weld with no current modification initially showed forceful extrusion of molten zinc from the faying interface—Fig. 5. Heat (as viewed by the growth of heat-tinted zones) appeared to move from the upper to the lower electrode interface (Fig. 6), and then molten zinc extrusion occurred at the upper electrode interface, and finally, at the lower electrode interface—Fig. 7. The formation of the nugget itself was rapid to the point of being violent—Fig. 8. The other welds in the schedule, all made with current modification, are described below with respect to how they altered the phenomena observed in Weld 1.

Although upsloping (Weld 2) and preheating (Weld 3) did not change the order of the zinc extrusion from the weld interfaces as observed in Weld 1, they did decrease the violence and speed. Upsloping and preheating also changed the pattern of heat growth. Instead of growing from top to bottom, the heated zone spread outward from the faying interface, rather than down from the upper electrode interface. When the duration of the modification was increased (Welds 4 and 5), the nugget began to form before the initiation of the weld current. Nugget growth was observed to be slower and more even with preheating.

As expected, downsloping and postheating did not affect the zinc extrusion or the preliminary heating of the weld, as compared to the weld with no current modification. Postheating (Welds 7 and 8) did reduce the violence of the iron extrusion from the molten nugget at the conclusion of the weld. Although downsloping (Welds 6 and 9) also reduced this extrusion, postheating appeared to be more effective.

During the filming, it was observed that, as the electrodes aged, a zone of molten iron began to form around the periphery of the weld—Fig. 9. This annular molten zone (AMZ) was initially not very well defined, but as the electrodes aged, it became better defined and grew inward to meet the expanding nugget. In many welds, it seemed that the AMZ grew into the center before the central nugget had formed.

The combination of upslope and downslope (Weld 10) appeared to combine the beneficial effects of each. The preliminary heating from upsloping initiated fusion of the iron substrate in the AMZ. At the onset of the weld current, the heating and fusion accelerated as the AMZ grew evenly to meet the expanding nugget, as shown in Fig. 10. During cooling, downsloping appeared to reduce the violent liquid motion of the molten nugget and the subsequent extrusion of iron. These effects were not as pronounced in the weld combining preheat and postheat (Weld 11). Preheating also did not initiate the preweld fusion of the iron substrate as did upsloping.

The last six welds of the series were made for the purpose of comparing the phenomena of short-time weld schedules to those of long-time schedules. The welding currents of the short-time welds were necessarily higher than those of the long-time welds in order to obtain a satisfactory nugget. The motion and extrusion of the molten nugget was observed to be much more violent in the short weld schedules, and the formation of the nugget was somewhat uneven and incomplete. At times, the sheets seemed to become molten before the faying interface. Another noticeable effect was that the preweld zinc extrusion of the short-time welds began at the electrode interfaces instead of the faying interface.

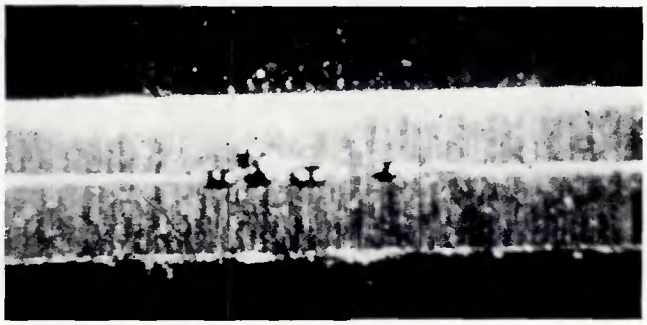

Fig. 5—Initial zinc extrusion from the faying interface

Discussion

Preweld current modification of galvanized steel improves nugget formation due to the combination of several phenomena (Ref. 10). It provides a smooth transition from the unheated state to the molten weld state. The more gradual heating allows the electrodes to extrude zinc from the interfaces, evenly deform the coupon, and produce a tight mechanical seal around the outer periphery of the weld. Extrusion of the zinc from the interfaces prevents liquid zinc from contacting the higher temperature liquid iron. Such contact would lead to explosive boiling of the zinc. The seal is beneficial in constraining the molten weld nugget and preventing expulsion. This seal is strongest at the area of highest deformation, so if the AMZ forms, a tight seal forms just beyond it, as shown in Fig. 11.

Heat flow is very important to the nugget formation process. Although the power required to form the nugget is virtually the same, long-time/low-current

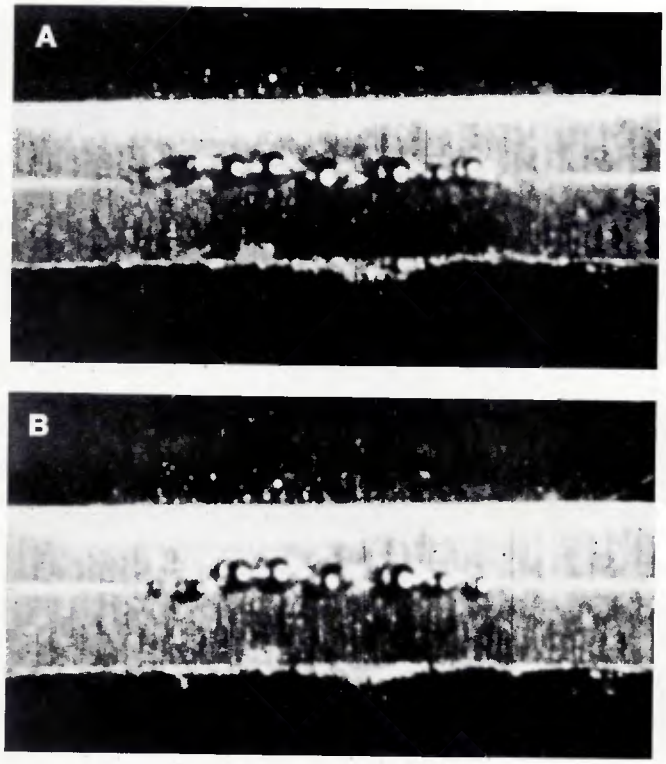

Fig. 6 — Heating appears to move: A — from the upper electrode; B — to the lower electrode

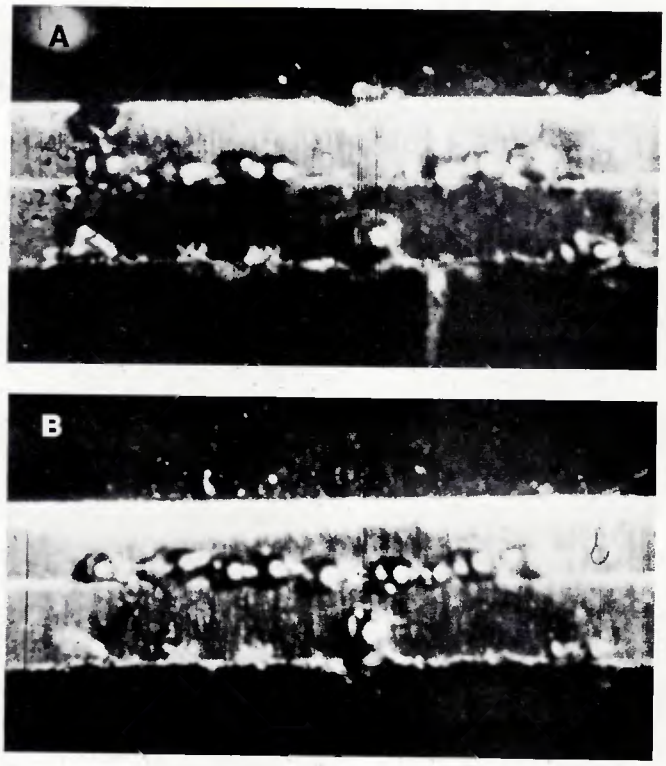

Fig. 7 — Zinc extrusion occurs: A — at the upper electrode interface; B — then at the lower electrode interface

Fig. 8 — Nugget growth with violent molten iron motion

Fig. 9 — Formation of the annular molten zone (AMZ)

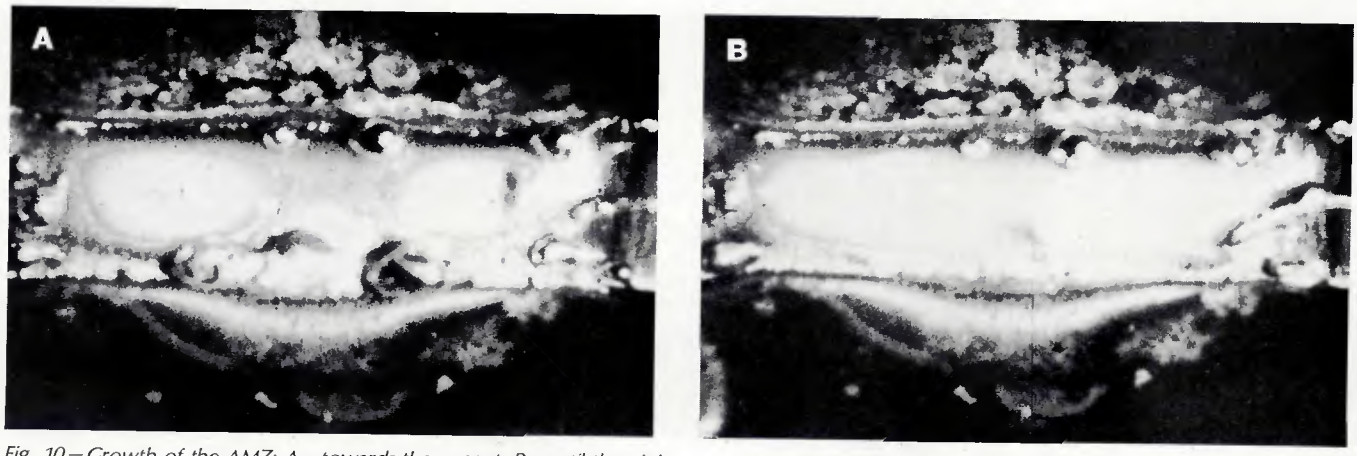

Fig. 10 — Growth of the AMZ: A — towards the nugget; B — until they join

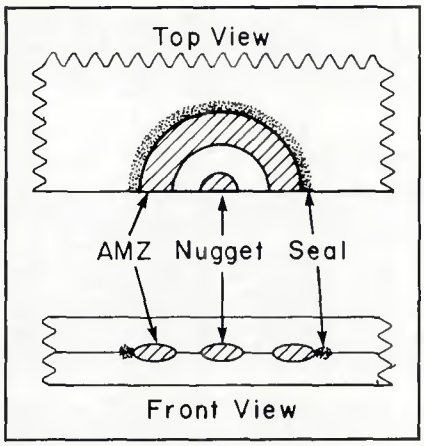

Fig. 11—Diagram showing the location of the deformation seal relative to the AMZ and nugget

welds invariably produced more uniform nuggets than short-time/high-current welds. In the long-time welds, heat generation is slower and more homogeneous. This more even heating generates a more uniform nugget geometry. The same idea applies for the seal phenomenon. If the heat generation is sufficiently slow, the deformation in the weld zone is a function of the welding head inertia maintaining the electrode force on the weld. As the heated metal softens, fusion of the iron substrate may begin at the periphery of the weld, where plastic deformation is highest. The seal helps prevent expulsion of the expanding molten material from the nugget center. This in turn allows the nugget to attain greater penetration and possibly form a stronger weld.

Short-time welds, in contrast, were heated too quickly to allow the deformation necessary to form the seal. The high current density made heat generation so rapid that fusion was nearly simultaneous throughout all areas of the nugget. Consequently, the molten nugget center was poorly constrained and was able to extrude itself more easily from the weld. The resulting nugget was more irregularly shaped and less thick than its long-time counterpart. In addition, this intense heat generation can lead to substantial heating at the electrode interfaces. This causes alloying of the electrode tips after repeated use, which in turn decreases tip life. Upthegrove and Key (Ref. 5) indicate that this alloying can change the order of preweld interfacial zinc extrusion, as was seen in this study.

Postweld current modification does not affect initial nugget formation, although Welds 6-9 seem to contradict this by showing AMZ formation. The welds in this study were not made in the same order as they are shown in Table 1; the welds with postweld current modification were actually made last. Due to their configuration, the electrode tips experienced rapid wear, especially in the center. The resulting concavity of the worn tips amplified the already higher force at the periphery of the tips, thus further enhancing the seal effect. The concavity also concentrated more current to the periphery, which caused greater heating at these locations. Both the deformation and the nonuniform current would promote formation of the AMZ.

On the other hand, postweld current modification is most likely responsible for inhibiting the violence of the molten nugget's motion. The gradual postweld reduction of current causes a reduction of the electromagnetic forces driving the vigorous convective flow of the molten metal. The films showed a direct correlation between these forces and the weld pool motion; each pulse of weld current was accompanied by a corresponding surge of pool motion.

The high-speed films show that the benefits of current modification are enhanced by phenomena that only develop in long-time welds. Although the peripheral seal appears to improve nugget formation by confining the molten material and forcing it to make a deeper rather than a broader weld, this phenomenon merits further examination. In particular, micrographic analyses and mechanical strength tests of the welds with and without this seal could help identify its significance. Assuming that the seal is proven to be a wholly beneficial phenomenon, other possible research could involve optimizing the electrode tip design to further enhance the seal formation. Recalling the effects of the worn tips on the seal formation, truncated-cone electrodes with hollowed centers could be such a design, although maintenance of such electrodes would be difficult in a practical situation.

This work also suggests that the current distribution may have a profound effect on the nugget formation behavior. Work is currently being conducted to examine this effect in order to further the understanding of the spot welding process for many different alloys and electrode tip geometries.

Conclusions

The following conclusions can be drawn from this analysis of resistance spot welding of galvanized steel sheet by high-speed cinematography:

1) Current modification can improve weld nugget formation.

2) Preweld current modification assists uniform nugget initiation.

3) Postweld current modification helps to suppress molten nugget expulsion.

4) Combining the preweld and postweld modifications combines their benefits.

5) Increasing the duration of current modification generally increases the benefits, although with diminishing returns.

6) For a given power, long-time/low-current welds yield superior nuggets to short-time/high-current welds.

7) The peripheral seal phenomenon appears to improve nugget formation and is enhanced by preweld current modification and increased weld duration.

8) It is hypothesized that electrode tip geometry and current distribution significantly affect the generation of the AMZ and peripheral seal.

Acknowledgments

The authors would like to thank Dr. J. Key of INEL, Idaho Falls, Idaho, for loaning his original film which inspired this work, and the following companies for sponsoring this project: Bethlehem Steel, General Motors, and the International Lead-Zinc Research Organization. We also acknowledge further financial assistance from the MIT Undergraduate Research Opportunities Program.

Appendix

Calculation of Current Setting for Semicircular Weld

In order to obtain the correct current for the semicircular weld geometry, it is necessary to understand the operation of the spot weld controller. The controller which was used for this study obeys the following rule:

$$I_i(n_i) = I_i(100)\, n_i/100 \qquad (1)$$

where $I_i(100)$ is the current obtained at 100% firing angle for one particular welding condition (i), n_i is the current setting (40-99% current) for condition i, and $I_i(n_i)$ is the current obtained with the current control set at n_i.

$I_i(100)$ is dependent upon both the resistance of the spot welded area and the power P that is delivered to the weld. P is only a function of the tap setting, since the transformer is a constant power device at 100% firing angle. This relationship can be stated as:

$$I_i^2(100) = P/R_i \qquad (2)$$

where R_i is the electrical resistance of the spot welded area.

We now consider the correspondence of two different weld conditions: i = 1, the normal full circle weld, and i = 2, the experimental semicircular weld. Because the semicircular weld has half the volume of the full circle weld:

$$I_2^2(n_2)\, R_2 = [I_1^2(n_1)\, R_1]/2 \qquad (3)$$

in order to maintain a uniform power per unit volume of weld metal.

Substituting Equation 1 into Equation 3:

$$n_2^2 I_2^2(100) R_2 = [n_1^2 I_1^2(100) R_1]/2 \quad (4)$$

and then using Equation 2 and solving for n_2 gives:

$$n_2 = n_1/2^{1/2} \quad (5)$$

The current setting for the semicircular weld is therefore reduced from the setting for the full circle weld by a factor of $2^{1/2}$.

References

1. Gedeon, S. A., Schrock, D., LaPointe, J., and Eagar, T. W. 1984. *Metallurgical and Process Variables Affecting the Resistance Spot Weldability of Galvanized Sheet Steel.* Technical Paper 840113, Society of Automotive Engineers, Warrendale, Pa.
2. Krause, H. J., and Simon, G. 1982. *Supplementary Models of Weld Nugget Formation taking Resistance Spot Welding of Soft Non-alloy Steels as an Example.* IIW Doc. III-716-82.
3. Rice, W., and Funk, E. J. 1967. An analytical investigation of the temperature distribution during spot welding. *Welding Journal* 46(4):175-s to 186-s.
4. Somsky, P. 1972. Special features of the formation of the weld nugget in resistance spot welding of galvanized sheets. *Zvarnie* 21(6):172–175.
5. Upthegrove, W. R., and Key, J. F. 1972. A high speed photographic analysis of spot welding galvanized steel. *Welding Journal* 51(5):233-s to 244-s.
6. Nied, H. A. 1983. The finite element modeling of the resistance spot welding process. *Welding Journal* 63(4):123-s to 132-s.
7. Kaiser, J. G., Dunn, G. J., and Eagar, T. W. 1982. The effect of electrical resistance on nugget formation during spot welding. *Welding Journal* 61(6):167-s to 174-s.
8. Holm, R. 1967. *Electric Contacts*, 4th ed.: 17. Berlin, Springer-Verlag.
9. Gedeon, S. A. 1984. *Resistance Spot Welding of Galvanized Steel Sheet.* S.M. thesis, Massachusetts Institute of Technology, Cambridge, Mass.
10. Gedeon, S. A., and Eagar, T. W. 1985. Resistance spot welding of galvanized steel: part II. Mechanisms of spot weld nugget formation. Submitted to *Metallurgical Transactions.*