Experiments on Some Arbitrarily Loaded Fillet Welds

Prediction of weld strength as it relates to force eccentricity is simplified

BY E. SANAEI AND A. G. KAMTEKAR

ABSTRACT. Tests on single fillet welds subjected to a shearing force applied along an arbitrary line of action are described. The test results are compared with the predictions of a simplified theory (Ref. 1) which expresses the strength in terms of the weld geometry, orientation with respect to the line of action of the applied force, the force eccentricity and the weld metal ultimate tensile strength (UTS). It is found that the theoretical predictions are reasonable estimates of the experimental results and that the orientation of the weld does not significantly affect its strength when the ratio of the force eccentricity to the weld length exceeds unity.

Introduction

Since the publication of the experimental work of Clark (Ref. 2) and Butler, Pal and Kulak (Ref. 3), it has been known that the strength of a fillet weld which is required to transmit a shearing force only depends upon the orientation of the weld with respect to the line of action of the applied force. This conclusion was reinforced by the more recent experiments reported by Swannell (Ref. 4). Recent theoretical investigations into this problem (Refs. 5, 6), although using very different approaches, provided similar expressions for predicting the failure loads of such welds.

The capacity of the weld is reduced when the applied force is eccentric with respect to the weld center, because the weld must then transmit both a shearing force and a moment. The effect of this force eccentricity on the weld strength has been investigated experimentally for the case where the line of action of the force is parallel to the weld length (Refs. 3, 7, 8); no experimental results appear to be available for any other cases. The general problem could be analyzed using the approaches developed by Clark (Ref. 2), Butler, *et al.* (Ref. 3), and Swannell (Ref. 4), but these authors only provided results for the cases where the line of action of the force was either parallel (Refs. 2, 3, 9) or perpendicular (Ref. 9) to the weld lengths. Their analysis procedures are computer-based and rely on empirical load-deformation curves. It is not easy to obtain general solutions using these procedures. A simplified analysis of the problem, which uses the approach detailed in Ref. 6, has been developed (Ref. 1). This leads to a pair of relatively simple expressions relating the weld strength to the force eccentricity, having as parameters the weld geometry, orientation and the weld metal UTS. The technique can, therefore, be used to predict the strength of any size of weld deposited using any electrode. For the particular case in which the applied force is parallel to the weld length, the two equations referred to above reduce to a single equation that relates the weld strength directly to the force eccentricity; this equation has been shown to give good predictions of experimental results (Ref. 10). The experimental program described in this paper was undertaken to check whether this simplified approach would give reasonable strength estimates for other cases.

KEY WORDS

Single Fillet Welds
Fillet Weld Strength
Shearing Force
Force Eccentricity
Weld Orientation
Strength Prediction
Strength Tests
Weld Leg Length
Weld Metal UTS
Longitudinal Stress

The Theory

The problem considered is shown in Fig. 1. A weld having equal leg lengths w is subjected to a shearing force P applied along a line of action which is inclined at an angle θ to the direction of the weld. The force eccentricity is defined by the length r of the perpendicular from the root at the center of the weld length to the line of action of P. The theoretical approach used to analyze the problem is detailed elsewhere (Ref. 1); only a summary of the method is given here for completeness.

The loads on the legs of the weld resulting from the force P consist of direct and shearing forces and moments. The moments are replaced by "equivalent" pairs of equal and opposite forces acting on the weld legs, and the weld is analyzed for this revised load system. It is assumed that the strength of the weld when it is subjected to this revised loading will be a good estimate of its strength when it is subjected to the actual loading. Under the revised loading system, the weld legs are subjected to direct and shearing forces only—Fig. 2. These forces are assumed to lead to uniform stresses on the areas over which they act. In addition to the stresses caused by the force P, the weld is subjected to a residual stress system, which is locked into it as a result of the welding process. In the as-welded condition, the major residual stress in the weld consists of a high tensile stress in the longitudinal direction. The other stresses are small and are neglected in the analysis. The longitudinal residual stress is assumed to be constant along the weld length, with its initial value (when P = 0) being equal to the weld metal yield stress (Ref. 6). As P is increased, the magnitude of this stress changes, but remains constant along the weld length; its value at the failure load has to be determined.

The stress system in the weld consists of direct and shearing stresses only. The weld length can be divided into specified regions, in each of which the stress sys-

E. SANAEI is a member of the Civil Engineering Faculty, Iran University of Science and Technology, Tehran, Iran. A. G. KAMTEKAR is with the Department of Civil Engineering, University of Birmingham, Birmingham, U.K.

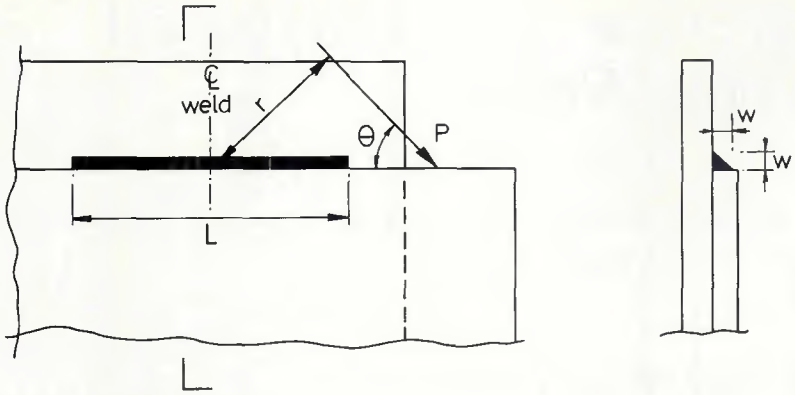

Fig. 1 – The problem considered

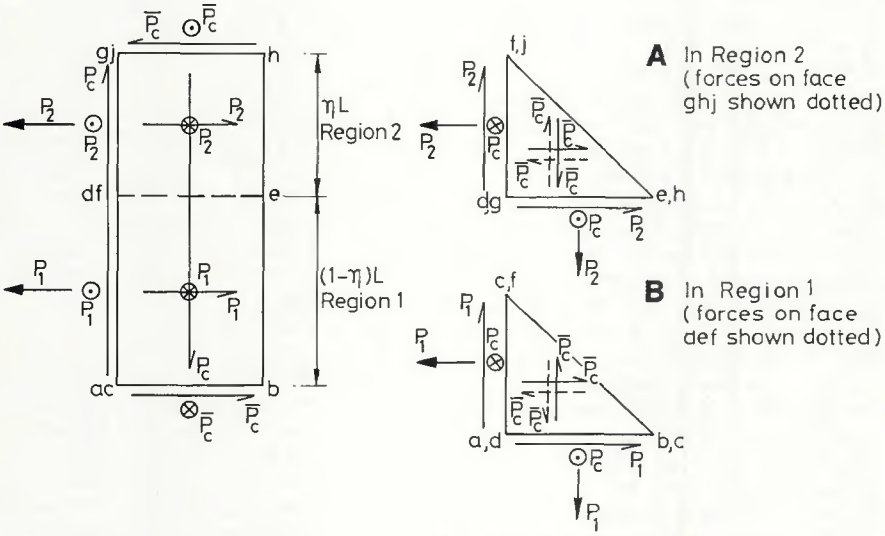

Fig. 2 – Forces in a weld at failure: $P_c = P\cos\theta$, $\bar{P}_c = P_c w/2L$, $P_1 = P\{(1-\eta)\sin\theta - 2\psi\}$, $P_2 = P\{\eta\sin\theta + 2\psi\}$

tem is uniform. If the weld is required to transmit a moment, the stress system has a discontinuity in it at a distance ηL (Fig. 2) from one end of the weld.

At failure, the whole weld length is assumed to have yielded under the action of the stresses present, and the yield stress of the weld metal at failure is assumed equal to its UTS (σ_u). Expressing this condition mathematically, and manipulating the resulting equations, leads to the following relationship:

$$\bar{\sigma} = \frac{\sigma}{\sigma_u} = \tfrac{1}{2}\left[3\sin^2\theta - 6\psi\sin\theta\left\{\frac{1-2\eta}{\bar{\eta}}\right\} + 4\psi^2\left\{\frac{1-3\bar{\eta}}{\bar{\eta}^2}\right\} + \frac{3}{2}\cos^2\theta\right]^{-1/2} \quad (1)$$

where $\sigma = P/wL$, $\bar{\eta} = \eta\,(1-\eta)$ and $\psi = r/L$.

The value of η is chosen to enable the weld to transmit the maximum possible load. Differentiating the expression for $\bar{\sigma}$ leads to the following equation for determining the value of η:

$$\psi\,(1-2\eta)\,(2-3\bar{\eta}) = \frac{3}{2}\,\bar{\eta}\,(1-2\bar{\eta})\,\sin\theta \quad (2)$$

Equations 1 and 2 define a parametric relationship between the failure load and the force eccentricity. This relationship can be shown graphically (Fig. 3) for easy use. Points on the curves are obtained by choosing suitable values for η, calculating the corresponding values of ψ for a specified value of θ from Equation 2, and then, calculating the values of $\bar{\sigma}$ from Equation 1. As ψ varies from 0 to ∞, Equation 2 requires that values of η should lie in the range of (0, ½). It can be shown (Ref. 1) that the value of the longitudinal residual stress at failure is a function of η, so that its magnitude at collapse is determined as soon as a value is chosen for η.

Figure 3 shows that the weld orientation affects its strength only for small values of ψ. When $\psi > 0.5$, the difference between the curves becomes small, and for $\psi > 1.0$, the strength becomes virtually independent of the weld orientation.

Equations 1 and 2 can be used to show that: 1) the substitution of $\theta = 0$ and $\theta = 90$ deg in the equations leads to the expressions derived previously (Ref. 11) for the special cases when the external force is either parallel or perpendicular to the weld length; 2) when $\psi = 0$, the expression for the strength of a weld which transmits a shearing force only (Ref. 6) is recovered; and 3) the strength of a weld subjected to a pure couple M_o is independent of θ and is given by

$$M_o = \frac{\sigma_u w L^2}{8} \quad (3)$$

The theory suggests (Ref. 1) that stress relieving can reduce the strength of some of the welds. The strength of longitudinally loaded welds ($\theta = 0$) is not affected at all. As θ increases, however, the reduction in strength also increases, being at a maximum of about 15% when $\theta = 90$ deg and $\psi = 0$. This effect, when present, is only significant for small values of ψ ($\psi < 1$). For higher values, the strength curves for stress-relieved welds coincide with those given in Fig. 3.

Strength curves are given in Fig. 3 for values of θ in the range of $0 \leqslant \theta \leqslant 90$ deg. It is clear from Fig. 1, however, that these will also be valid outside this range. The strength of a weld for which 90 deg $\leqslant \theta \leqslant$ 180 deg, for example, is the same as that of a weld inclined at an angle 180 deg $- \theta$ to the line of action of the applied force.

The Experimental Program

Aims

The aims of the experiments performed were: 1) to check the theoretical strength predictions for various weld orientations (θ) and force eccentricities (ψ); and 2) to confirm that the weld strength is independent of its orientation with respect to the line of action of the applied force when $\psi > 1$.

Specimens

Four weld orientations were investigated (θ = 0, 30, 60 and 90 deg). These were chosen so that the results for $\psi = 0$ could be compared with those obtained by earlier workers (Refs. 2-4).

The specimens were made up by welding three plates together to provide a pair of identically loaded test welds – Fig. 4. The various weld orientations were

achieved by cutting the welded edge of the outer plates at the required angle. The specimens were designed to ensure that failure would occur in the weld, with the component plates remaining elastic at the failure load. The material of the component plates conformed to B.S. 4360, Grade 43A (Ref. 12). This meant that the central and outer plates had to be of 250- × 25-mm (9.84- × 1-in.) and 200- × 15-mm (7.87- × 0.59-in.) sections, respectively.

Four series of tests were performed. Each series consisted of four specimens, one for each of the weld orientations investigated. Once specimens belonging to one series had been tested, the remains of the failed welds were ground off and the component plates were re-welded to provide specimens for the next series. Thus, only enough material for fabricating four specimens was necessary. This was obtained from stock.

The welds were 100 mm (4 in.) long. To ensure that the weld cross-section remained constant over this length, the deposited welds were longer than 100 mm, but they were milled to the required length. Since the results were to be assessed on a nondimensional basis, the actual weld leg length was not critical. The only requirement specified was that all the welds should be of the same size. The leg lengths of the welds were about 8 mm (5/16 in.). All welding was performed in the civil engineering department workshop by the same welder, using the shielded metal arc process. They were made using 10 swg electrodes designated E43 according to B.S. 639 (Ref. 13). These electrodes are similar to those designated E60XX by the AWS specification (Ref. 14). Each weld was deposited in one pass using a current of 117 A and an open-circuit voltage of 80 V.

Four eccentricities were investigated (ψ = 0, 0.15, 1.0 and 2.0). The specimens with ψ = 0 repeat the tests performed by others (Refs. 2–4). The first tests performed with this value of ψ gave variable results, and it was decided to repeat these tests (the repeated test specimens are indicated by a suffix R in Table 2). Although specimen A901 was intended to have zero eccentricity, it was actually tested at an eccentricity of 7 mm (ψ = 0.07). The tests for ψ = 1 were intended to confirm that the weld strength for this eccentricity was independent of θ. Reference to Fig. 3 shows that the spread in the strength curves for different values of θ decreases rapidly once ψ assumes values greater than zero. Bearing in mind the scatter that is usually present in the results of tests on fillet welds, it was decided that only the specimens for which θ = 0 and 90 deg should be tested for ψ = 0.15. A value of ψ = 2.0 was used for the other two specimens that were available.

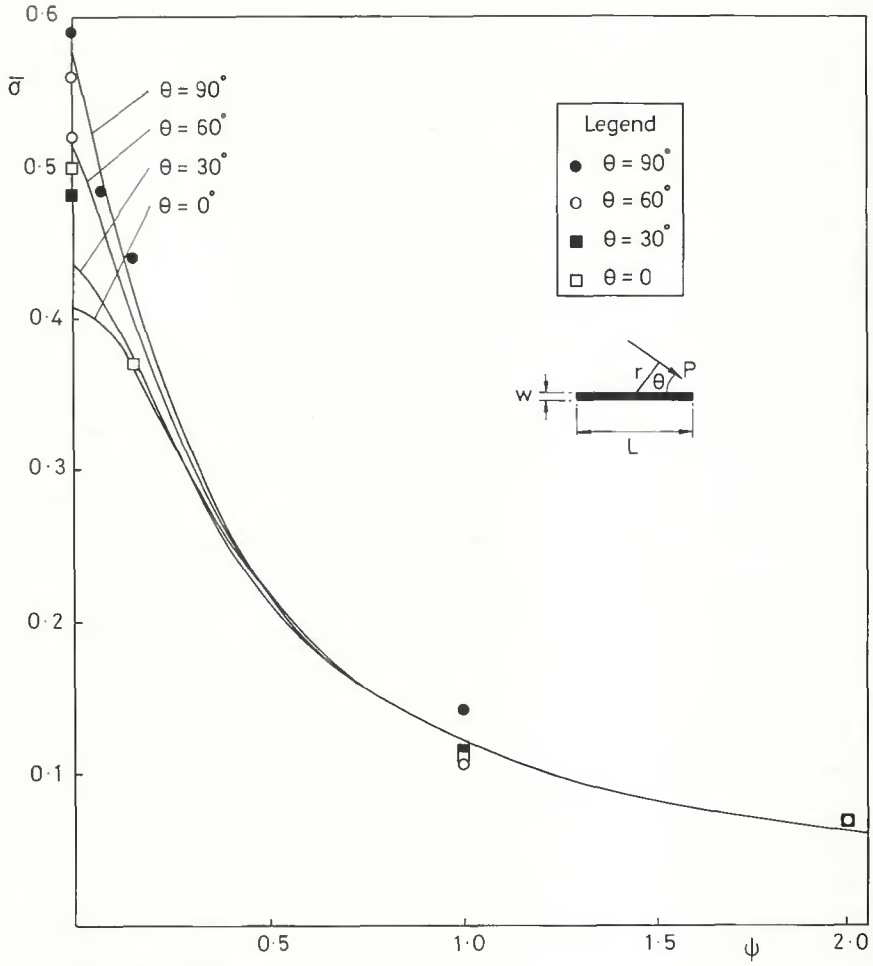

Fig. 3 — Strength curves

Material Properties

One of the two important parameters in the theoretical assessment of weld strength is the weld metal UTS. This was obtained by performing tension tests on specimens of circular cross-section cut from deposited weld metal. These specimens were obtained in the manner specified in Appendix D of B.S. 639 (Ref. 13). (They are similar to the all weld metal tension test specimen specified in Ref. 14.) The values of the yield and ultimate tensile stresses obtained are given in Table 1.

Tension tests were also performed on full-thickness coupons of rectangular section obtained from the 15- and 25-mm-thick plates used to make up the specimens. The results are listed in Table 1.

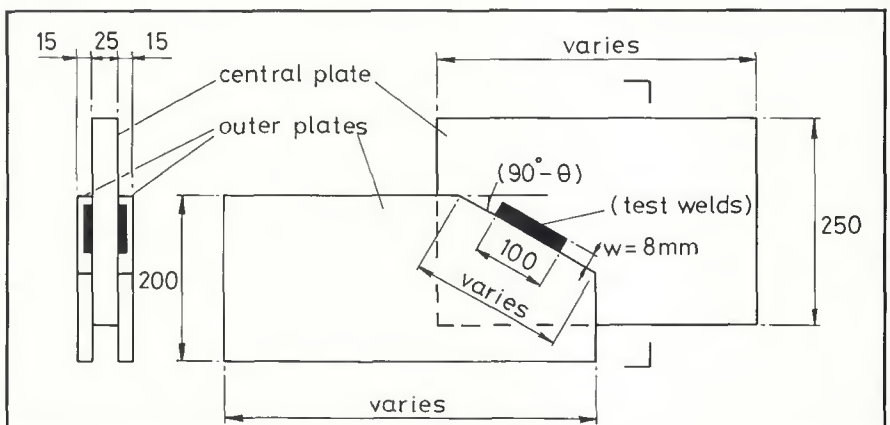

Fig. 4 — Test specimens

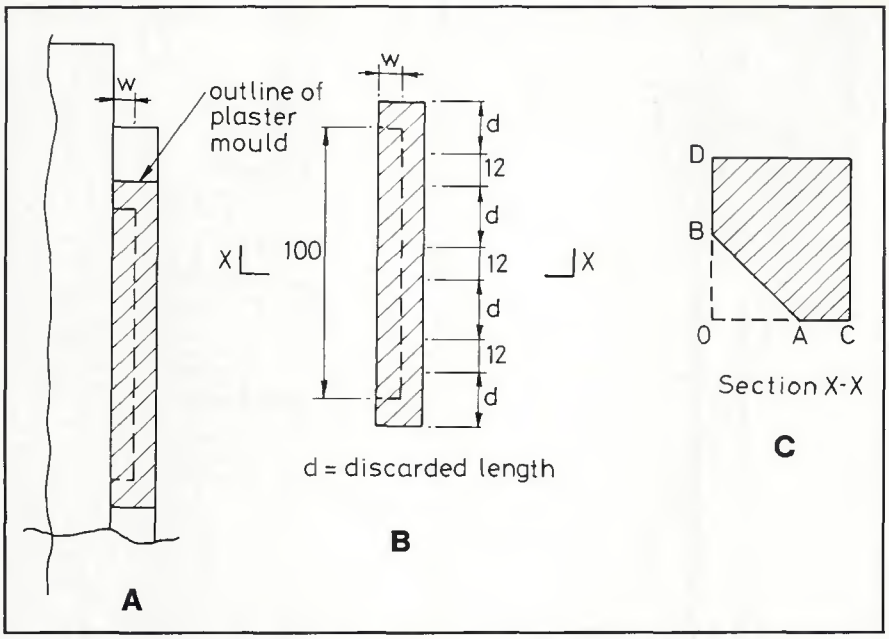

Fig. 5—Determination of weld leg length using a plaster mold

Measurement of Weld Size

The second important parameter in the assessment of weld strength is the leg length. This is difficult to measure directly and the following two methods were used to estimate it. During the fabrication of the specimens, the remains of the electrodes used to deposit a weld were collected and their lengths measured. From a knowledge of the initial length of each electrode, its diameter and the length of weld deposited, the average cross-sectional area of the weld was calculated and the leg length was estimated, assuming that the two legs were of equal length. Once the specimen had been fabricated, molds of the welds were made by pouring quick-setting plaster over them. After the plaster had set, the molds were removed, their ends were discarded and three 12-mm (0.47-in.) long pieces were cut from each mold at positions along the weld length—Fig. 5. The cross-section of a typical piece is shown in Fig. 5C, in which AB is the face of the weld and AC and BD are the surfaces of the component plates on which the weld is deposited. The lengths OA and OB (which are the leg lengths) were measured in two ways. Relatively crude measurements were first made using a square and rule. This was followed by more accurate measurements using a shadowgraph at a magnification of 10. Thus, six measurements were available for each leg of each weld. The two measurements of a leg at any one position were in reasonable agreement, but the size of each leg varied appreciably over the weld length. A global average leg length was calculated for the two welds on each specimen. This compared well with the leg length calculated from the volume of weld metal used. It is quoted in Table 2 and used in the analysis of the results. It should be noted that this assumes that the area OAB in Fig. 5C represents the weld cross-section. No account is taken of any root penetration achieved.

Table 1—Material Properties

Material	Yield Stress[a] (N/mm²)	UTS[a] (N/mm²)	Remarks
Weld metal	405	491	Mean of 3 tests
15-mm-thick steel	291	467	Mean of 2 tests
25-mm-thick steel	228	450	Mean of 2 tests

(a) 1N/mm² = 0.145 ksi

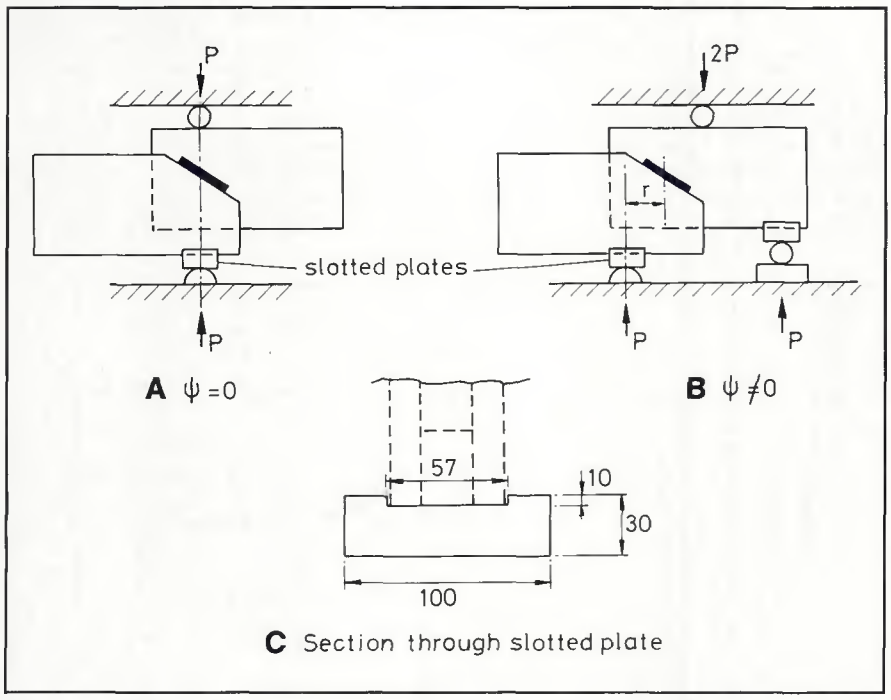

Fig. 6—Test setup. A—Supported at one point ($\psi = 0$); B—supported at two points ($\psi \neq 0$); C—section through slotted plate

Test Setup and Procedure

The specimens were tested in a 1000-kN capacity Avery testing machine. They were supported on the bed of the machine and loaded by reacting them against its top platen via a roller—Fig. 6. Specimens for which $\psi = 0$ were supported on the bed at one point only (Fig. 6A), whereas the others were supported at two points and tested as simply supported beams subjected to a central point load—Fig. 6B. Slotted plates were used at each supported end to prevent lateral movement there—Fig. 6C.

The displacement of an outer plate relative to that of a central plate was measured using two gauging LVDT's. These were clamped to the 25-mm-thick plate and monitored the movement of brackets attached to one of the outer plates. One LVDT was placed on each side of the weld. The arrangement for a $\theta = 90$ deg specimen is shown in Fig. 7. The output from each LVDT was fed, via a conditioning amplifier, into both a digital voltmeter and a data logger. The amplifier gain was adjusted to give an

output of 1 V/mm. The voltmeters were used to set up and zero the LVDT's and to monitor the progress of the test. The data logger provided a punched paper tape, which allowed the results to be processed by computer. Unfortunately, measurements could not be taken throughout the test because of the danger that the LVDT's might be damaged by the violent nature of the failure. Information was usually obtained up to a load corresponding to about 75% of the theoretical failure load.

The specimens were loaded continuously to failure. The data logger recorded the output from the LVDT's at 20-s intervals. On completion of the tests, the failure loads and the approximate inclinations of the failure surfaces were noted. The failed welds were inspected to ensure that they were sound. The specimens were then returned to the workshop for rewelding.

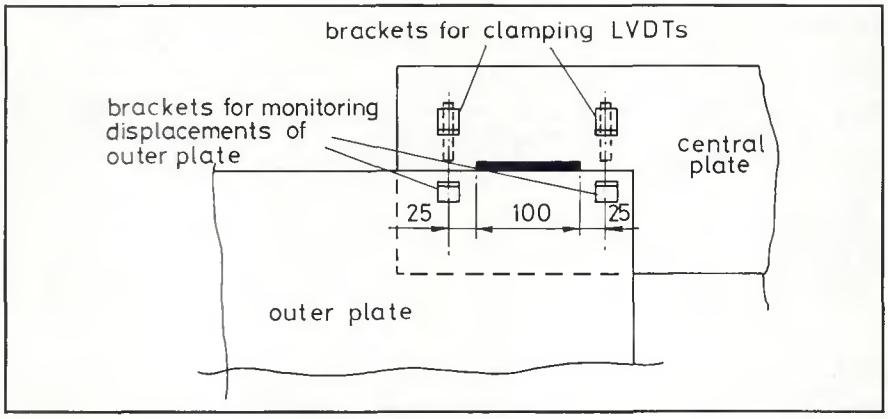

Fig. 7 — Displacement measurement (θ = 90 deg)

Table 2—Test Results

Spec Ref.	θ (deg)	w[a] (mm)	ψ	$\bar{\sigma}$ Experiment	$\bar{\sigma}$ Theory	$\bar{\sigma}$ Experiment / $\bar{\sigma}$ Theory
A901R	90	7.9	0.00	0.590	0.577	1.02
B601	60	8.5		0.520	0.516	1.01
B601R	60	7.8		0.560	0.516	1.09
C301	30	8.0		0.486	0.436	1.11
C301R	30	7.9		0.499	0.436	1.14
D001	0	7.9		0.501	0.408	1.23
D001R	0	7.1	0.00	0.501	0.408	1.23
A901	90	7.8	0.07	0.488	0.500	0.98
A902	90	7.9	0.15	0.440	0.421	1.05
D002	0	7.6	0.15	0.371	0.366	1.01
A903	90	7.8	1.00	0.142	0.121	1.17
B603	60	8.5		0.107	0.120	0.89
C303	30	7.7		0.115	0.120	0.96
D003	0	8.0	1.00	0.113	0.120	0.94
B605	60	7.7	2.00	0.069	0.062	1.11
C305	30	7.7	2.00	0.070	0.062	1.13

(a) 1 mm = 0.0394 in.

Results and Discussions

The results are plotted in Fig. 3, and the experimental and theoretical values of $\bar{\sigma}$ are listed in Table 2.

Inspection of the failed welds showed that a small amount of slag was present in some of the failed welds, but this was not considered to have been large enough to seriously affect the failure loads.

It is seen from Equation 1 that the strength of a weld is directly proportional to its leg length, w. A good weld will generally achieve some root penetration, which will, in effect, increase its size (*i.e.*, w), leading to a proportional increase in its strength. Since the measurements for w (the lengths OA and OB in Fig. 5C) did not allow for any root penetration that might have been achieved, the weld strengths obtained experimentally are likely to be higher than those predicted by Equations 1 and 2. This is seen to be so for most of the results given in Table 2.

Table 2 shows that the theory provides reasonable strength estimates for the majority of the specimens, the difference between the theoretical and experimental failure loads generally being about 10%. In view of the simplicity of the approach adopted and the fact that both the root penetration and weld reinforcement are ignored in the calculations, this agreement between theory and experiment is considered to be acceptable. Surprisingly, the theory seems to provide very conservative strength estimates for longitudinal welds with $\psi = 0$. The predicted strength for this case is found to be the product of the throat area and the maximum shearing stress. This is in line with the formulas proposed in other investigations (Refs. 15, 16).

The results confirm that the weld strength becomes independent of its orientation when $\psi \geqq 1$. This is to be expected because the applied moment becomes the dominant loading for these cases (see Equation 3).

Figure 3 shows that, for small values of ψ, the strength curves for θ = 60 and 90 deg have much steeper gradients than those for θ = 0 and 30 deg. Thus, even a small eccentricity in the loading will produce a significant reduction in the weld strength for these cases. When comparing the results for specimens A901 and A901R (Table 2), for example, an eccentricity of 7 mm (ψ = 0.07) is seen to predict a 13% drop in the theoretical failure load. The effect of load eccentricity is much less significant when θ = 0 or 30 deg. Changing the value of ψ from zero to 0.07 for θ = 0, for instance, reduces the theoretical weld strength by only 2.5%. This may explain the scatter that is obtained in the results of tests on transversely loaded welds.

For a specified loading, Equations 1 and 2 lead to an estimate of the weld strength, which depends upon the weld geometry and the weld metal UTS only. These data are readily available to a designer so that the proposed procedure allows the strength to be calculated easily. The other approaches suggested for the problem (Refs. 2-4) require empirical load-deformation curves for different weld sizes, electrodes and weld orientations. Currently, such data are only available for 6-mm (1/4-in.) leg length welds deposited using E60XX type electrodes (Ref. 14). The proposed procedure can be applied to any size of weld and for any type of electrode, provided only that the UTS of the deposited weld metal is known. It is therefore believed to be an advance on the methods used previously.

An examination of the orientation of the failure surface showed that when $\psi = 0$, the specimens for which $\theta = 0$ failed on a "plane" which approximately coincided with the throat (Fig. 8A), but each of the other specimens failed on a "plane" which was nearly parallel to a weld leg — Figs. 8B-D. The observations for $\theta = 0$ and $\theta = 90$ deg agree with those of Higgins and Preece (Ref. 17) and Swannell and Skewes (Ref. 9). Once the value of ψ increased, the orientation of the failure surface for specimens with

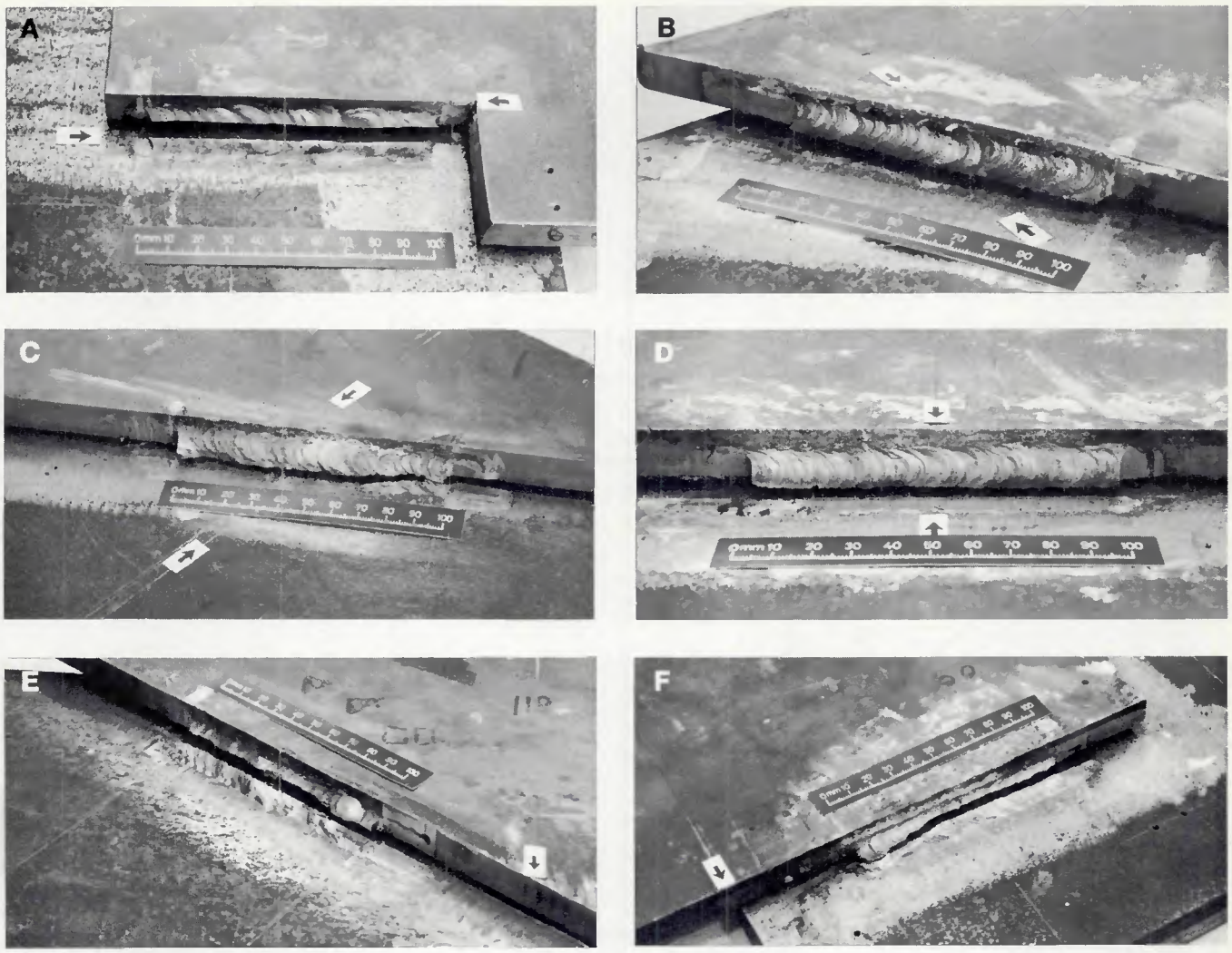

Fig. 8 — Orientation of failure surfaces. A — $\theta = \psi = 0$; B — $\theta = 30$ deg, $\psi = 0$; C — $\theta = 60$ deg, $\psi = 0$; D — $\theta = 90$ deg, $\psi = 0$; E — $\theta = 60$ deg, $\psi = 1$; F — $\theta = 90$ deg, $\psi = 1$

$\theta = 30$, 60 and 90 deg changed; it was found to be more nearly aligned with the weld throat — Figs. 8E and F.

As indicated earlier, displacements were only measured over a part of each test, the measurements being stopped at load levels which were between 60% and 75% of the observed failure loads. Since measurements are not available at the failure loads, they are not discussed in detail. However, it was possible to make the following comments:

1) For the $\psi = 0$ specimens, the rotation between the plates was negligible. The translations between the plates measured along the line of action of the force at 60% of the observed failure load were similar in magnitude to those obtained by Butler, *et al.* (Ref. 3) (varying between 0.1 and 0.2 mm); this is despite the fact that the welds used had a leg length of about 8 mm (0.31 in.), compared to the 1/4 in. leg size used in Ref. 3.

2) The major displacement in specimens with $\psi \geqq 1$ was the relative rotation between the component plates. The translations between the plates were much smaller than those obtained for $\psi = 0$. This tends to confirm that the applied moment is the major load effect for these specimens.

It was indicated earlier that the theory suggests that stress relieving prior to testing would decrease the weld strengths in some cases. This effect has not been investigated in the experimental program described in this paper.

Conclusions

The paper has described some tests on single fillet welds subjected to an eccentrically applied shearing force which is inclined at an arbitrary angle θ with respect to the weld length. The results were compared with the predictions of a simplified theory, and it was found that the theoretical predictions were in reasonable agreement with the test results. The tests confirmed that the weld strength is independent of its orientation when $\psi \geqq 1$. Since the weld strength can be predicted from a knowledge of the weld geometry and the weld metal UTS only, it is suggested that the proposed procedure represents an advance on currently available methods for assessing the strength of such welds.

Acknowledgments

The work reported in this paper was carried out in the Department of Civil Engineering, Birmingham University, when Dr. Sanaei was on sabbatical leave from the Iran University of Science and Technology. The help given by the department's workshop (particularly Mr. J. Patel) in fabricating the specimens and by the laboratory staff (particularly Mr. J. Singh) during the testing is gratefully acknowledged.

References

1. Kamtekar, A. G., and Sanaei, E. 1986. The strength of some arbitrarily loaded fillet weld groups. *Proc. Int. Conf. on Steel Structures:*

Recent Research Advances and their Application to Design, Part I, Budva, Yugoslavia, pp. 335–344.

2. Clark, P. J. 1971. Basis of design for fillet-welded joints under static loading. *Proc. Conf. on Improving Welded Product Design.* The Welding Institute, Cambridge, U.K.

3. Butler, L. J., Pal, S., and Kulak, G. L. 1972. Eccentrically loaded welded connections. *Proc. ASCE, J. Struct. Div.*, 98 (ST 5), pp. 989–1005.

4. Swannell, P. 1981. Rational design of fillet weld groups. *Proc. ASCE, J. Struct. Div.*, 107 (ST 5), pp. 789–802.

5. Neis, V. 1985. New constitutive law for equal leg fillet welds. *Proc. ASCE, J. Struct. Engineering*, 111 (8):1747–1759.

6. Kamtekar, A. G. 1987. The strength of inclined fillet welds. *J. Constrct. Steel Research* 7(1):43–54.

7. Archer, F. E., Fischer, H. K., and Kitchen, E. M. April 1959. Fillet welds subjected to bending and shear. *Civ. Eng. Pub. Wks. Review* 54(634):455–458.

8. Dawe, J. L., and Kulak, G. L. Welded connections under combined shear and moment. *Proc. ASCE, J. Struct. Div.*, 100 (ST 4), pp. 727–741.

9. Swannell, P., and Skewes, I. C. January 1979. The design of welded brackets loaded in-plane: elastic and ultimate load techniques – AWRA report, P6-8-77. *Australian Weld. J.*, pp. 28–59.

10. Kamtekar, A. G. 1984. The strength of planar fillet weld groups subjected to a shearing force applied outside their planes. *J. Construct. Steel Research* 4(3):163–199.

11. Kamtekar, A. G. 1987. The strength of planar fillet weld groups subjected to an eccentric shearing force in their planes. *J. Construct. Steel Research* 7(3):155–187.

12. *Specification for Weldable Structural Steels.* British Standard 4360, 1979.

13. *Specification for Covered Electrodes for the Manual Metal-Arc Welding of Carbon and Carbon Manganese Steels.* British Standard 639, 1976.

14. *Specification for Covered Carbon Steel Arc Welding Electrodes.* AWS A5.1-78, American Welding Society, Miami, Fla.

15. Kato, B., and Morita, K. 1969. The strengths of fillet welded joints. International Institute of Welding, Doc. XV-267-69.

16. Design rules for arc-welded connections in steel submitted to static loads. 1976. *Welding in the World* 14(5/6):132–148.

17. Higgins, T. R., and Preece, F. R. 1968. Proposed working stresses for fillet welds in building construction. *Welding Journal* 47(10):429-s to 432-s.

—TECHNICAL COMMITTEE MEMBERSHIP—

The AWS C1/WRC Committee on Resistance Welding has openings for committee membership. This committee is concerned with the establishment of standards and recommended practices for the various resistance welding processes—spot, projection, seam and flash butt welding. Applicants should have experience in one or more of these processes. Committee personnel who would like to be classified as users are especially desired.

In addition, the AWS C-4 Committee on Gas Welding and Oxygen Cutting has openings for committee membership. This committee is concerned with the establishment of standards and recommended practices for various gas welding and oxygen cutting processes. Applicants should have experience in oxyfuel gas cutting or gas welding. Committee personnel who would like to be classified as users are especially desired.

For further information, contact Wes Dierschow, Technical Department, American Welding Society, P.O. Box 351040, Miami, FL 33135, telephone (305) 443-9353.

Revised WRC Bulletin 297
September 1987

Local Stresses in Cylindrical Shells Due to External Loadings on Nozzles—Supplement to WRC Bulletin 107 (Revision I)

By J. L. Mershon, K. Mokhtarian, G. V. Ranjan and E. C. Rodabaugh

This Revised Bulletin 297 is intended as a replacement for the current supplement to Bulletin 107 and is specifically applied to cylindrical nozzles in cylindrical vessels. It replaces WRC Bulletin 297, August 1984. The changes in the text, figures and tables to update the 1984 edition of Bulletin 297 are described in the "Foreword to Revision I."

This revised Bulletin was prepared by the Subcommittee on Reinforced Openings and External Loadings of the Pressure Vessel Research Committee of the Welding Research Council. The price of Revised Bulletin 297, September 1987, is $24.00 per copy, plus $5.00 for postage and handling. Orders should be sent with payment to the Welding Research Council, Suite 1301, 345 E. 47th St., New York, NY 10017.

WRC Bulletin 328
November 1987

This bulletin contains two reports covering related studies conducted at The University of Kansas Center for Research, Inc., on the CTOD testing of A36 steel.

Specimen Thickness Effects for Elastic-Plastic CTOD Toughness of an A36 Steel

By G. W. Wellman, W. A. Sorem, R. H. Dodds, Jr., and S. T. Rolfe

This paper describes the results of an experimental and analytical study of the effect of specimen size on the fracture-toughness behavior of A36 steel.

An Analytical and Experimental Comparison of Rectangular and Square CTOD Fracture Specimens of an A36 Steel

By W. A. Sorem, R. H. Dodds, Jr., and S. T. Rolfe

The objective of this study was to compare the CTOD fracture toughness results of square specimens with those of rectangular specimens, using equivalent crack depth ratios.

Publication of these reports was sponsored by the Subcommittee on Failure Modes in Pressure Vessel Materials of the Pressure Vessel Research Committee of the Welding Research Council. The price of WRC Bulletin 328 is $20.00 per copy, plus $5.00 for postage and handling. Orders should be sent with payment to the Welding Research Council, Suite 1301, 345 E. 47th St., New York, NY 10017.