# Metallurgical Aspects of Additive-Aided Wide-Clearance Brazing with Nickel-Based Filler Metals

*Experimentation with filler metal preforms shows promise of extending the brazing process to parts with wide joint clearances*

**BY E. LUGSCHEIDER, Th. SCHITTNY AND E. HALMOY**

ABSTRACT. An essential property of high-temperature brazing with nickel-based filler metals is the strong reaction of the braze with the base metal, which results in high strength joints. As commonly known, this reaction is based on dissolving, alloying and diffusion mechanisms.

Additive-aided wide joint clearance brazing exploits these mechanisms for joining large components exhibiting noncapillary clearances. With this technique, a brazing preform is inserted into the brazing clearance. It provides capillary paths for the liquid filler metal and, by decreasing the volume of filler metal required, decreases the relative amount of the metalloids in the brazed joint. The new alloy that is formed during brazing is ideally a homogeneous solid solution.

The alloying and diffusion reactions of the standardized filler metal BNi-5 with additives made from a Ni-Cr alloy were studied. The additive preforms and some composite material preforms were produced by means of powder metallurgy. During brazing, the porous additive preform was wetted by the liquid filler metal, which had been preplaced in a deposit. Composite material preforms consist of a mixture of additive and filler metal powders, which can either be compacted and slightly sintered or be hot isostatically pressed before brazing. The brazing was performed with the aid of induction heating in a dry hydrogen atmosphere. During brazing, pressure was applied to the joint in order to deform the preform and ensure minimal residual porosity. The deformation of the preform serves to equalize the production tolerances of the joining pieces.

The techniques used for characterizing the brazed joints included scanning electron microscopy, energy dispersive x-ray (EDX) spectroscopy, and a computer-controlled image analysis system for quantitative determinations of the amount of brittle phases and pores in the brazed joint.

We found that, unlike ordinary high-temperature brazing, the microstructure of the brazed joint strongly depends on the brazing temperature. The temperature and the ratio of filler metal to additive were the most important brazing parameters. The brazing time and the particle size of the metal powders employed are of secondary importance.

These properties are due to two types of reactions: the dissolving and alloying reactions of filler metal with additive and solid-state diffusion of the filler metal's metalloids. As the dissolving and alloying reactions are advancing, the concentration of the metalloids in the liquid phase is decreasing and thus increasing the liquidus of the arising alloy. These liquid phase reactions happen fast so that the liquidus of the new alloy reaches the brazing temperature within seconds and the reaction ends in an isothermal solidification. In the same way, the additive's powder particles, which are solid during the whole process, become smaller as the reaction advances. Thus, the preform can be recompacted by applying a small amount of pressure upon the joint. The amount of remaining brittle phases and pores in the brazed joint depends on the degree of these reactions that are related to the brazing temperature and the ratio of filler metal to additive. The subsequent solid-state diffusion, which is much slower, can dissolve remaining brittle phases and increase the toughness of the brazed joint. It is mainly ruled by the brazing time and the particle size of the additive powder.

The metallographic evaluations which give evidence to the alloying reactions and the subsequent diffusion were confirmed by data from mechanical testing and the examination of fracture surfaces.

*E. LUGSCHEIDER and Th. SCHITTNY are with Aachen University of Technology, Aachen, West Germany. E. HALMOY is with Statoil Trondheim, Norway.*

*Paper presented at the 19th International AWS Brazing and Soldering Conference, held April 19–21, 1988, in New Orleans, La.*

**KEY WORDS**

Wide Clearance Brazing
Nickel Filler Metals
BNi-5 Filler Metal
Additive-Aided Braze
Noncapillary Clearance
Ni-Cr Additives
Additive Preforms
Furnace Brazing
Induction Brazing
HIP Preforms

## Introduction

High-temperature brazing with nickel-based filler metals is widely used, both in conventional and high-technology industries. The strong reactions of the braze with the base metal are based on dissolving, alloying and diffusion reactions. They provide tough joints so that high-temperature brazing is the most suitable joining technique in many applications. With all nickel-based filler metals, metalloids such as boron, silicon and phosphorus serve as melting point depressants and provide excellent flowing and wetting properties. These metalloids form brittle intermetallic compounds in the brazing joint, thus decreasing the toughness of the joint if the clearance exceeds about 50 $\mu$m (Refs. 1, 2).

For this reason, several attempts have been made, both to provide capillary flow paths for the liquid filler metal in noncapillary clearances, and to decrease the concentration of the filler metal's metalloids in wide-clearance joints (Refs. 3–6). This is done in order to allow larger production tolerances, to join large parts and to fill wide cracks in the field of repair brazing (Refs. 7–9).

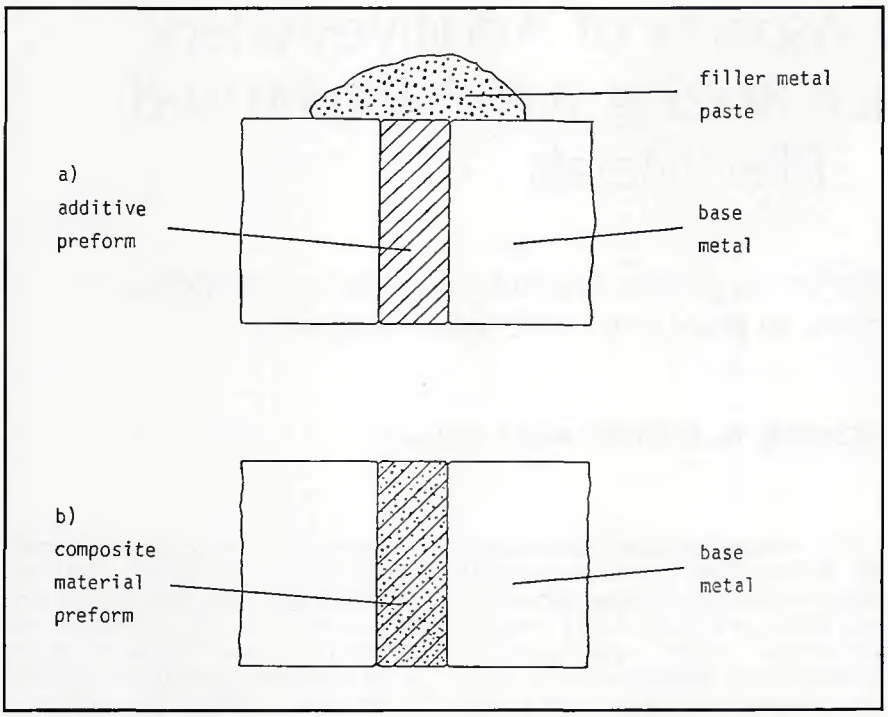


*Fig. 1—Preplacement of filler metal and additive material with sintered preforms. A—Additive preform; B—composite preform*


*Fig. 2—Unbrazed additive preform*

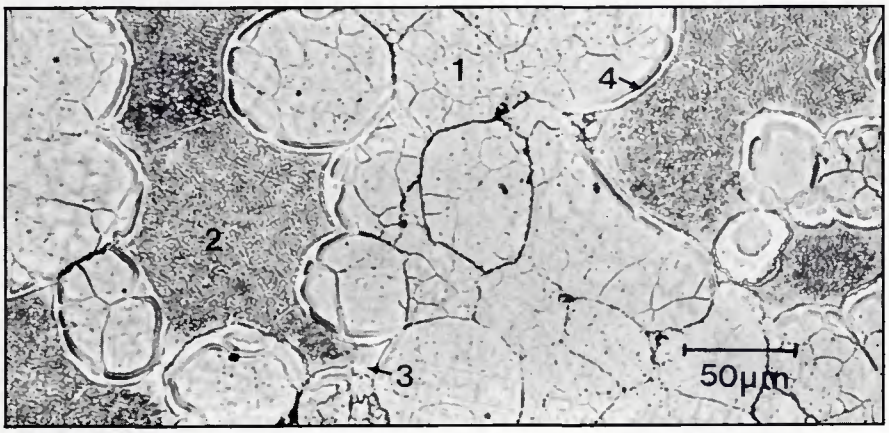


*Fig. 3—HIP composite material preform. 1—additive powder particles; 2—filler metal powder particles; 3—filler metal depleted of silicon by diffusion; and 4—reaction zone of filler metal and additive*

All such methods employ an additive material besides the filler metal, which is supposed to react with the liquid filler metal but not melt during the brazing process. The metallurgical reactions between filler metal and additive material are similar to those of the braze with the base metal. But they proceed much faster than in ordinary high-temperature brazing if the right combination of filler metal and additive can be used (Ref. 4).

With the technique described in the following text, a brazing preform is inserted into the joint clearance. The preform was made by powder metallurgical means (Ref. 5). It can consist of either the pure additive material, an alloy similar to the filler metal but showing a higher melting point, or of both the filler metal and the additive material. In the former case, the filler metal would be preplaced outside the joint and allowed to flow through the capillary spaces in the preform during brazing.

## Brazing Preforms

All types of preforms, the pure additive (Fig. 1A) and the composite material preforms (Fig. 1B), were produced by powder metallurgical means. With this method, morphology of the preform, *i.e.,* the size of powder particles and the ratio of filler metal to additive, can be precisely controlled. The preform is to be inserted into the joint clearance.

When applying the pure additive preform, the filler metal is put into a deposit in excess and soaks the porous additive preform during brazing (Figs. 1A and 2). Such preforms were produced from the additive metal powder by compacting and subsequent sintering (Ref. 5). The composite material preforms already contain the filler metal and the additive so that no extra material is needed (Fig. 1B). They were produced from a mixture of the metal powders by compacting and subsequent sintering (Ref. 5) or by hot isostatic pressing (HIP). Figure 3 gives a cross-section of a HIP preform. The alloys employed were the standardized filler metal BNi-5 (Ni-19Cr-10Si) and the alloy Ni-20Cr as the additive material.

## Brazing Process

Wide-clearance brazing can be performed as well by furnace brazing (heating by radiation) as by induction brazing, and either vacuum or reducing gas atmosphere can be used. With both brazing processes, the brazing time required (10 min with vacuum brazing, 60–120 s with induction brazing) was much shorter than that of ordinary high-temperature brazing (Refs. 1, 2, 10) because the distances over which dissolution, alloying and diffusion reactions occur are smaller.

The experiments with the HIP composite material preforms were performed by induction brazing. With this technique, a pressure of 8.5 MPa (1233 psi) was applied to the joint, thus recompacting the preform and equalizing production tolerances and the misalignment of the parts that are to be brazed. Figure 4 gives the principle for the induction brazing of pipes in a dry hydrogen and argon atmosphere. The two pipes are fixed by chucks and can be pressed against each other by a pneumatic cylinder. The joint is locally heated by an induction coil. The joint temperature can be measured by a shielded thermocouple or a pyrometer. The brazing atmosphere is dry hydrogen and argon, a humidity below 200 ppm by volume is recommended.

## Metallurgical Reactions

The main issue of wide-clearance brazing is that the liquid filler metal and the solid additive material react with each other at their interfacial surfaces so that a new alloy is formed in the joint. The reactions in question are the dissolving of solid material by the liquid braze, alloying reactions in the liquid phase and, to a minor extent, solid-state diffusion of the filler metal's metalloids into the additive material. All these reactions are known from ordinary high-temperature brazing. Figure 5 gives micrographs of two capillary joints (Ref. 12). During the brazing process, the liquid filler metal dissolved part of the base metal at the faying surfaces. As is commonly known, the amount of dissolved material depends on the brazing temperature and the chemical composition of both the filler metal and the base metal. The macroscopic effect of this dissolving reaction is known as erosion.

The second reaction that occurs is a nucleation at the faying surfaces followed by a growth of the nuclei into the brazing joint (Fig. 5A) until the grains of the base metal have grown right through the brazing joint (Fig. 5B). These reactions are accompanied by solid-state diffusion in the growing nuclei and the adjacent base metal (Refs. 11, 12).

The same reactions are valid for wide-clearance brazing but, as shown in Figs. 2 and 3, there is one essential difference. It is the area of the interfacial surfaces between the liquid filler metal and the solid phase (*i.e.*, the additive material above all) that is very large in proportion to the volume of the filler metal. If the mean diameter of the additive powder particles is about 70 $\mu$m, the surface of the powder is about 800 times as large as the faying surfaces of a capillary joint (taking into account that part of the powder particles are sintered to one another). Therefore, the wide-clearance brazing process is much more deter-

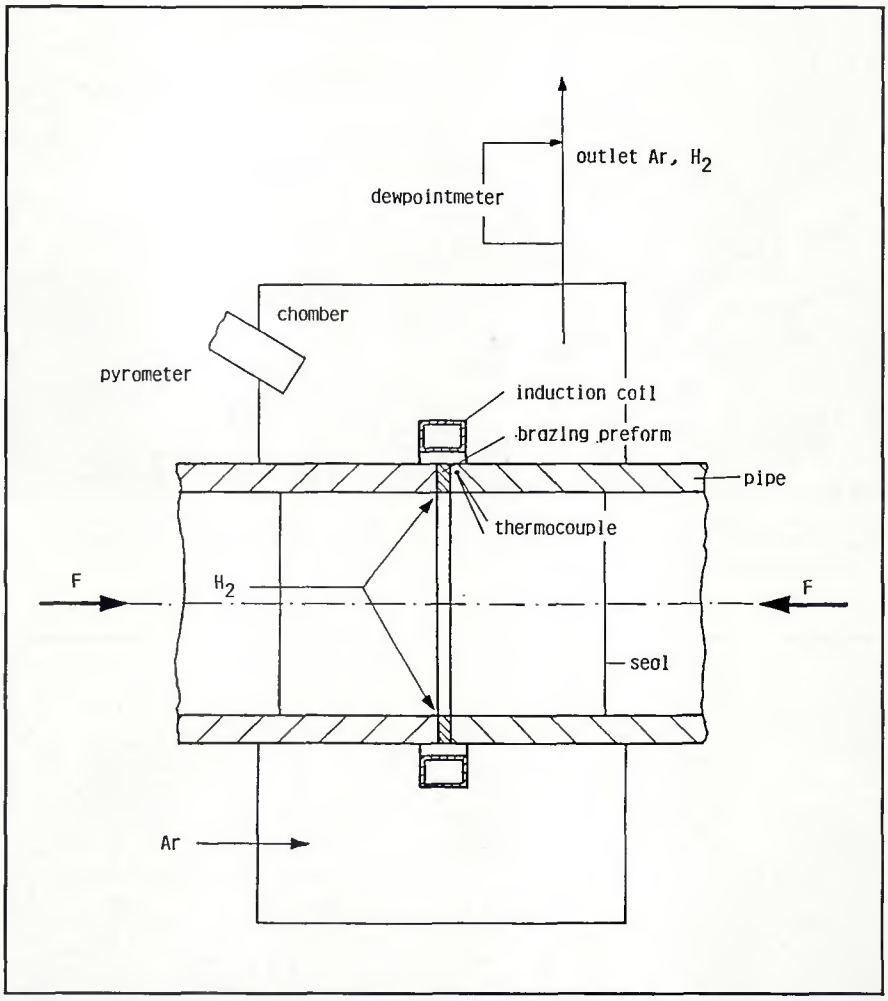


*Fig. 4 — Principle for wide-clearance brazing of pipes, heating by induction heating. Proportions of the pipes: 70- to 100-mm diameter, 7-mm wall thickness*

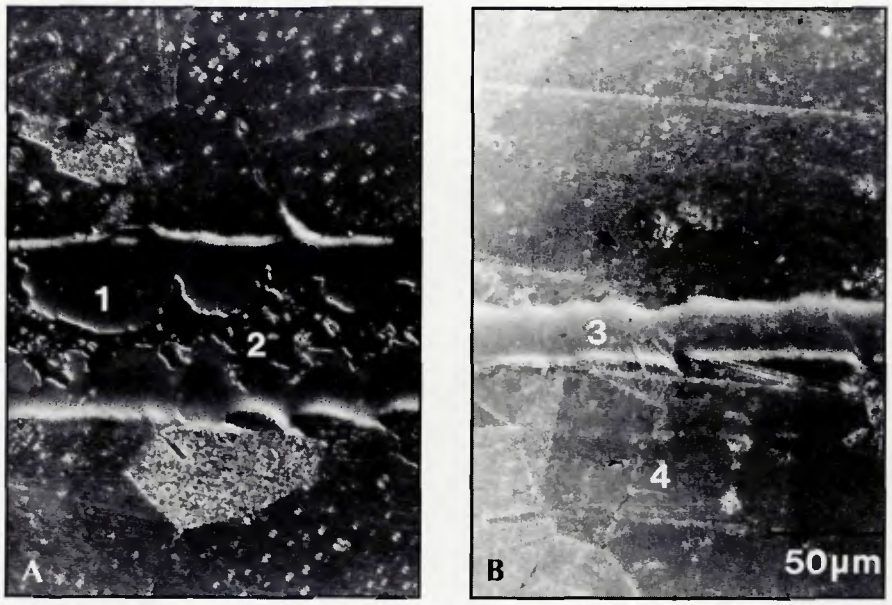


*Fig. 5 — Capillary joint, filler metal: Ni-20.3Cr-11.5Si-0.5P (Ref. 12), brazing conditions: 1150°C/10 min, vacuum brazing. A — Joint width: 80 $\mu$m; B — joint width: 25 $\mu$m. 1 — nucleus grown from the base metal into the brazing joint; 2 — eutectic structure; 3 — joint free of brittle phases, grains extending from the base metal through the joint; and 4 — base metal: austenitic steel according to AISI 321*

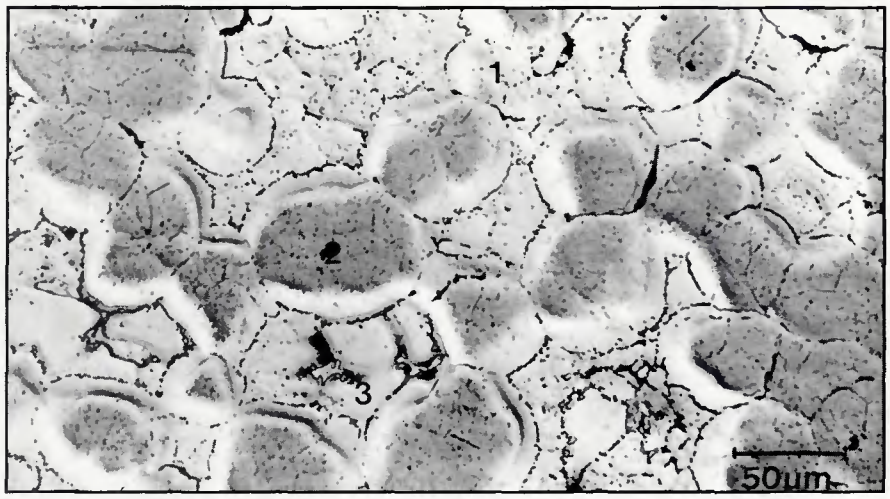


*Fig. 6 — Brazed joint containing a HIP composite material preform. Brazing conditions: 1230°C/60 s, induction brazing. 1 — new alloy (Ni-Cr-Si solid solution) formed by dissolving and alloying reactions; 2 — former additive (Ni-Cr solid solution); and 3 — brittle phase*

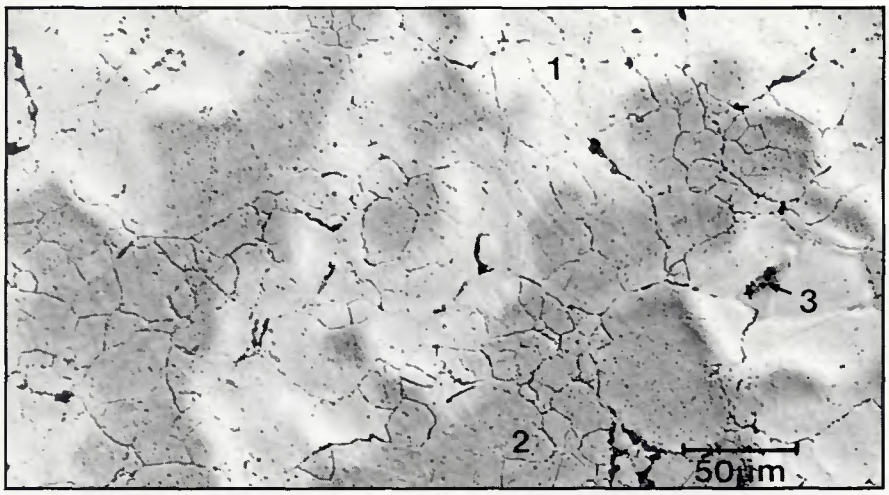


*Fig. 7 — Brazed joint containing a HIP composite material preform. Brazing conditions: 1260°C/60 s, induction brazing. 1 — new alloy (Ni-Cr-Si solid solution) formed by dissolving and alloying reactions; 2 — former additive (Ni-Cr solid solution); and 3 — brittle phase*

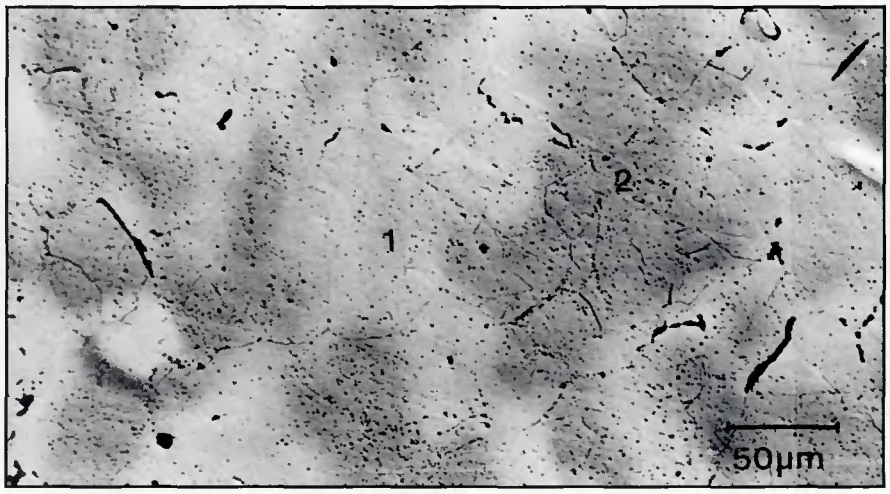


*Fig. 8 — Brazed joint containing a HIP composite material preform. Brazing conditions: 1280°C/60 s, induction brazing. 1 — new alloy (Ni-Cr-Si solid solution) formed by dissolving and alloying reactions; and 2 — former additive (Ni-Cr solid solution)*

mined by surface reactions, such as dissolving processes and reactions in the liquid phase like the alloying reactions, than is the case with capillary high-temperature brazing.

These reactions are mainly determined by the brazing temperature, as given in Figs. 6–8. With each sample, the microstructure of the brazed joint mainly consists of two solid solutions, first of the additive material and second of a new alloy that was formed during the brazing process by dissolution of the additive material. A comparison of the microstructure of the unbrazed HIP specimen (Fig. 3) and that of the brazed joint (Fig. 6) shows that the outer shells of the additive powder particles were dissolved by the liquid filler metal. The additive powder particles became smaller and are less extensively interconnected after the brazing process. This reaction advances further at higher brazing temperatures as can be seen in Figs. 7 and 8. At the same time, the filler metal alloys with the dissolved additive material and the silicon concentration of the new alloy is decreased. Therefore, the microstructure of the joint becomes much more homogeneous at elevated brazing temperatures.

As the silicon concentration of the arising alloy is being decreased during the brazing process, the liquidus temperature of the new alloy increases and reaches the brazing temperature. At this point of the process, the dissolving and alloying reactions end in an isothermal solidification. As the new alloy shows a smaller silicon concentration than the original filler metal, most of the silicon can be dissolved in the new NiCrSi-solid solution (Figs. 6 and 7). If this concentration is below 5% by weight, the precipitation of brittle phases can be prevented — Fig. 8. Almost all silicon of the joint could be found in the new alloy by EDX measurements. This indicates that the wide-clearance brazing process is controlled by the dissolving and alloying reactions and not by the solid-state diffusion that is much slower.

At the same time as the metallurgical reactions in the brazing joint advance, the partly dissolved powder particles of the additive material become smaller and the contact between them loosens so that the preform can be easily deformed. A small pressure of about 8 MPa is sufficient to squeeze out a part of the liquid phase and deform the preform in order to equalize production tolerances of the joining pieces. A careful monitoring of the brazing process showed that the deformation of the preform took place within the first seconds after the filler metal became liquid. Also, the material that was squeezed out was still liquid, no further deformation could be recognized even if a higher pressure was applied to

the joint. As the original additive material is not interconnected after the brazing process but is embedded in the new alloy (Figs. 6–8), it can be seen that most of the new alloy becomes solid within the first seconds of the actual brazing process. That means that the dissolving and alloying reactions proceed within seconds until the liquidus temperature of the new alloy reaches the brazing temperature, and the isothermal solidification takes place.

The same reactions can be found with wide-clearance brazing in vacuum. Figure 9 gives the micrograph of a brazing joint that was wide-clearance brazed at 1200°C (2192°F) for 10 min. Again, the joint consisted of two solid solutions belonging to the former additive and the new alloy that was formed during the brazing process. The brazing time needed is longer than with induction brazing because there is no eddy current, which could mix the liquid phase during the brazing process.

## Applications of Wide-Clearance Brazing

The enhanced speed of metallurgical reactions in additive-aided wide-clearance brazing allows the use of very short brazing times. The process also equalizes production tolerances of the parts that are to be joined if a small pressure can be applied across the joint during brazing. With both methods, induction brazing in a reducing gas atmosphere or vacuum brazing, brazements could be produced in wide-clearance joints with a tensile strength that is in the range of the base metal. The best values of vacuum brazed samples were 570 MPa (82.6 ksi) (Ref. 4). With induction brazing, the tensile strength was between 520 and 600 MPa (75.4 and 87.0 ksi) and bend angles up to 45 deg could be achieved. The samples were bend tested according to DIN 50111 and ASTM E190-80, respectively. The bend radius was 1.5 times the thickness of the specimen. The preforms could be deformed by 40 to 60% during the induction brazing without influencing the toughness of the joint. This tolerance of the wide-clearance brazing process can be used to equalize production tolerances and misalignment of large joining pieces. As the metallurgical reactions of the filler metal with the base metal are the same as with capillary high-temperature brazing, the wide-clearance brazing process can be used for the joining of all materials that are brazed by ordinary high-temperature brazing.

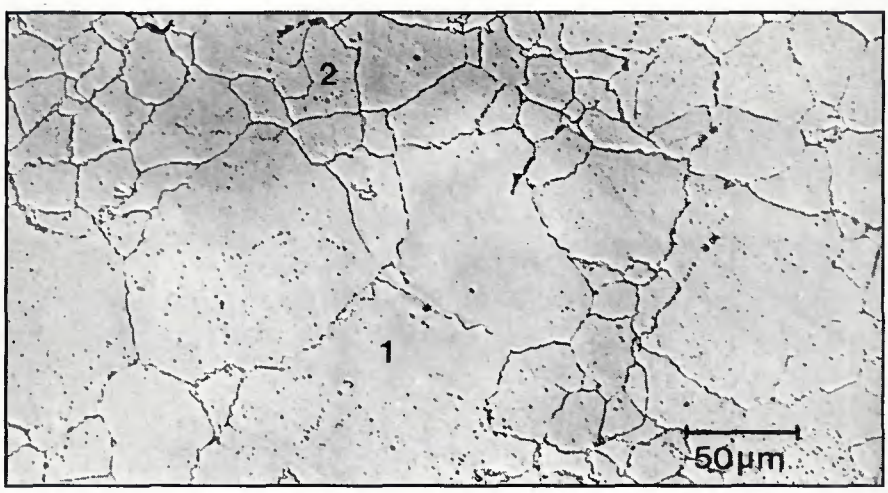


*Fig. 9 — Brazed joint containing a HIP composite material preform. Brazing conditions: 1250°C/10 min., vacuum brazing. 1 — new alloy (Ni-Cr-Si solid solution) formed by dissolving and alloying reactions; and 2 — former additive (Ni-Cr solid solution)*

## Conclusions

The metallurgical investigations on joints that were brazed by additive-aided wide-clearance brazing show that the very large interfacial surfaces between the additive material and the filler metal in wide-clearance joints changes the nature of the brazing process so that very short brazing times can be used. The brazing process is mainly determined by surface reactions such as the dissolving of the additive by the liquid filler metal and reactions in the liquid phase like alloying reactions. As the brazing preforms, which contain the additive material or both the filler metal and the additive, can be deformed during the brazing process, production tolerances of large parts can be equalized by this process. Although not yet ready to be put into production, the results obtained so far show the great potential of this joining method.

*Acknowledgment*

The work referred to in this paper was performed in cooperation with and sponsored by the research and development department of Statoil, Den norske stats oljeselskap a.s., of Trondheim, Norway.

*References*

1. Lugscheider, E., and Partz, K.-D. 1983. High-temperature brazing of stainless steel with nickel-base filler metals BNi-2, BNi-5 and 8Ni-7. *Welding Journal* 62 (6): 160-s to 164-s.

2. Lugscheider, E., Klöhn, E., and Lison, R. 1979. Strength of high-temperature brazed joints. *Welding Journal* 58 (10): 296-s to 300-s.

3. Zhuang, H., Chen, J., and Lugscheider, E. 1986. Wide gap brazing of stainless steels with nickel-base brazing alloys. *Welding in the World* 24 (9/10):200–208.

4. Lugscheider, E., Dietrich, V., and Mittendorff, J. 1988. Wide joint clearance brazing with nickel-base filler metals. *Welding Journal* 67 (2): 47-s to 51-s.

5. Lugscheider, E., and Schittny, Th. 1988. Wide gap brazing of stainless and carbon steel. *Brazing & Soldering* Vol. 14, Spring 1988: 27 to 29.

6. Chasteen, J.W., and Metzger, G. E. 1979. Brazing of Hastelloy X with wide clearance butt joints. *Welding Journal* 58 (4): 111-s to 117-s.

7. Jürgens, W., and Malik, M. P. 1985. Wide gap brazing in the maintenance of turbine guide vanes. *DVS Bericht* 98: 78 to 82.

8. Janke, B., and Demny, J. 1983. Microstructural investigations of a nickel-based repair coating processed by liquid phase diffusion sintering. *Thin Solid Films* Vol. 110:225–235.

9. van Esch, H. 1986. Braze repair techniques for gas turbine blades and vanes. *Turbomach. Int.* (9):29–32.

10. Lugscheider, E., and Krappitz, H. 1986. The influence of brazing conditions on the impact strength of high-temperature brazed joints. *Welding Journal* 65 (10): 261-s to 267-s.

11. Lugscheider, E., Partz, K. D., and Lison, R. 1982. Thermal and metallurgical influences on AISI 316 and Inconel 625 by high-temperature brazing with nickel base filler metals. *Welding Journal* 61 (10): 329-s to 333-s.

12. Lugscheider, E., and Cosack, Th. 1988. High-temperature brazing of stainless steel with low-phosphorous nickel-based filler metal. *Welding Journal* 67(10):215-s to 221-s.

13. Lugscheider, E., and Schittny, Th. 1988. Advances in wide gap brazing of carbon steel pipes. Internal report, Material Science Institute, July 1988.