Inexpensive Computer-Controlled Fracture Toughness Testing

An inexpensive automated test procedure is developed to determine fracture toughness values based on code standards

BY V. MORGENSTERN, R. HERRERA, H. D. MEJÍAS AND B. M. PATCHETT

ABSTRACT. The work presented here set out to find an inexpensive way to control a testing machine and acquire load-extension data for posttest analysis, and offer the results in a readable form. The computer chosen was the Commodore 128 (or 64) equipped with suitable interfaces and software to control a tensile testing machine and produce single-specimen J-R and CTOD-R curves by a series of unloading and loading cycles during testing. Compliance of the cracked specimen under load is assessed at each unloading point. Unloading takes place at specified intervals during both elastic and plastic deformation. Typical experimental results for welded joints are presented.

Introduction

Fracture toughness testing, whether to assess unwelded materials or the various zones in a weldment, can be an expensive and time-consuming exercise if data are to be useful in design. The cheaper forms of toughness testing, such as Charpy V-notch impact testing, are increasingly being relegated to the quality control field. The measurement of fracture toughness via the K_{Ic} test or the J-integral test requires, in most cases, full-section tests of a larger scale rather than the small Charpy specimens. Some tests can require the use of several specimens to achieve one toughness determination, as in the J-R curve.

In order to obtain the values of CTOD (Ref. 1) and J-integral (Ref. 2) at initiation (δ_i and J_{Ic}, respectively), it is necessary to develop a crack extension resistance curve with the values of δ and J corresponding to different amounts of stable crack growth. There are two commonly used procedures to accomplish this: 1) multiple-specimen crack front marking method (Refs. 1, 2), or 2) the single-specimen unloading compliance technique (Refs. 3, 4).

Although the fracture parameters are calculated in a similar way for both the crack front marking and the unloading compliance methods, the crack extension values necessary for the development of the resistance curves are determined very differently for each technique. The generation of an entire J-R (or δ-R) curve from a single specimen requires the remote detection of small amounts of crack extension with a high degree of confidence. When the elastic unloading compliance measurement technique is used, crack lengths are determined from a knowledge of specimen compliance, calculated from load and displacement data obtained during a partial unload of the specimen at various points throughout the test. The amount of crack extension up to partial unloading is determined by subtracting the initial precrack length from the calculated crack length.

It is possible to use computers to automate much of the testing mentioned, and many laboratories do just that. However, the cost of setting up such a system can be substantial. In many cases, only data acquisition is accomplished with the computer, leaving more expensive equipment to be found for control of the testing machine and analysis of the data.

This work describes the development of an inexpensive automated test procedure to determine J_{Ic}, δ_i and the critical values of CTOD (δ_c) according to ASTM E813-81 (Ref. 2) and BS 5762-79 (Ref. 1); and includes a critical evaluation of the system performance based on test results from A36 steel in both the base metal and weld metal made with a narrow-groove GMAW process. Weld metal samples made with the SMAW process using AWS E8018-C1-type consumables are also assessed. It is to be noted that interest in this paper is not with relationships between J_i and δ_i other than those already established in the literature. Our system can be used to establish either J_i or δ_i values according to the methods outlined in their respective standards. We do not comment on the validity of other relationships, since our sole motivation was to construct a system that is both accurate and inexpensive. We also do not comment on the use of instrumented Charpy tests, since our system is not designed to evaluate such tests. Our comment regarding the Q/C uses of the Charpy test is intended for the standard (uninstrumented) test.

Description of Equipment

Load, clip-gauge displacement and load-line displacement are used to assess both fracture toughness values (CTOD and J) and the amount of crack extension at any point during the test. The procedure employed to calculate both CTOD and J-integral values is outlined in the Appendix. Based on previous work (Refs. 3, 5), an automated posttesting procedure was designed. The posttesting system records the load and displacement data points and calculates parameters after conclusion of the test. The test is conducted using an MTS servohydraulic test machine with standard analog control electronics. Computer control of the

V. MORGENSTERN and R. HERRERA are with the University of Tennessee, Knoxville, Tenn. H. D. MEJÍAS is with the University of Alberta, and B. M. PATCHETT is with the Department of Mining, Metallurgical and Petroleum Engineering, University of Alberta, Edmonton, Alberta, Canada.

Details of the specific hardware and software used in this study can be obtained from Dr. B. M. Patchett.

KEY WORDS

Fracture Toughness
Toughness Testing
Computer Controlled
Inexpensive Testing
J-R/CTOD-R Curves
Commodore 128 (or 64)
J-Integral Test

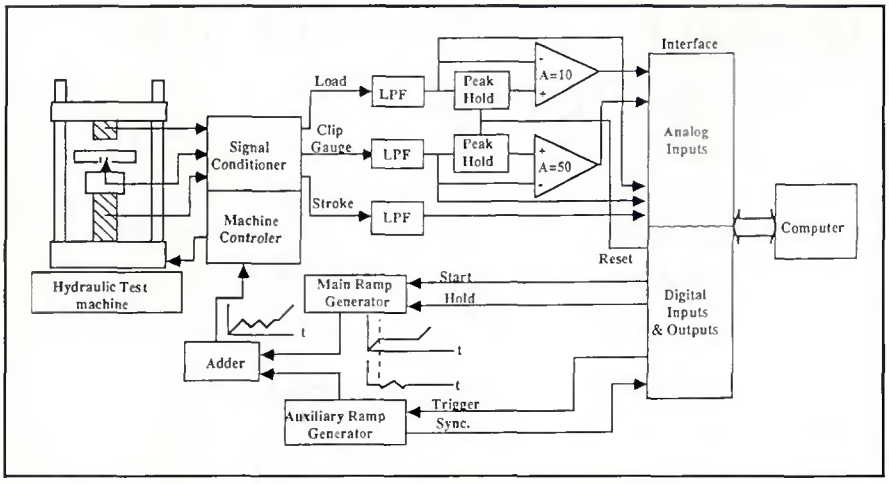

Fig. 1—Schematic representation of hardware

specimen loading, as well as all data acquisition, is provided through a 12-bit data acquisition system. A schematic representation of the hardware is shown in Fig. 1.

Prior to the development of the testing system, the ability of the data acquisition and electronic systems to determine fracture parameters within prescribed accuracy limits required by standard methods was assessed. Van der Sluys, *et al.* (Ref. 4), showed that to reach satisfactory accuracy in evaluating the specimen compliance, it is necessary to use about 100 points to describe the unloading line. That represents, for a deeply cracked 30-mm (1.2-in.) thick specimen with a total displacement during partial unloading of 0.05 mm (0.002 in.), a resolution for each point recorded of 0.006% of the total line displacement.

The 12-bit system used can describe a total of 4096 digits over the full displacement range, with an optimum accuracy of ±1 digit. This represents a possible error of $\left(\frac{2}{4096} \times 100\right) \approx 0.05\%$. To overcome this inaccuracy, the load and displacement voltages recorded during each partial unloading are amplified by factors of 10 and 50, respectively. To do this without exceeding the range of the data-acquisition system (10 V), ranging is accomplished using a peak-hold system plus a differential amplifier in both the load and clip-gauge signal. Both of the high-gain signals are filtered prior to amplification for noise suppression. The output voltages from the load cell, LVDT and clip gauge are all conditioned to let 10 V represent their total ranges.

To provide a linear ramp signal for loading and unloading, a secondary function generator was designed. It is basically a logic-controlled integrator that is capable of maintaining a linear ramp over relatively long periods of time using simple analog circuitry.

Three JFET switches are used to control the integrator. Proper setting allows either a zero integrator amplifier output, a ramp down or up function, or a maintenance of the previous output voltage to allow the ramp to be interrupted and then continued.

Whenever the integrator reaches a + or − limit or crosses zero volts from either direction, a clock pulse is generated that can be used to advance the sequence controller. The sequence controller feeds signals to the switch panel circuitry, which, when in "local" mode, controls the action of the integrator via the integrator drive logic (IDL) circuitry. In "remote" mode, the IDL circuit is controlled by two transistor-transistor logic (TTL) voltage levels obtained from a computer control output. The sequence circuit also feeds a priority encoder that provides the computer with a four-bit binary-coded decimal, which defines the step of the sequence being performed.

Manual switches are provided, as well as TTL-compatible inputs, for resetting and stepping the sequencer.

The system is under the control of a Commodore 128 computer, which, because of its low cost, makes the system particularly attractive when starting from scratch.

Automated Procedure

The automated testing system records the load and displacement data points, and allows the plotting and calculation of the parameters after conclusion of the test. The complete sequence is conducted in three stages:

1) Set up of testing machine.
2) Elastic-plastic test.
3) Posttest data analysis.

Stages 1 and 2 are conducted on the Commodore 128 (or 64) minicomputer. Figure 2 shows the computer program flow chart for Stages 1 and 2.

After input of material tensile properties and specimen dimensions, the program prompts the directions for the set up of the different control devices, including: selection of tensile/compression ramp signal on main function generator, set up of unload ramp signal on secondary function generator, extent of unloading, and loading and unloading rates. Testing parameters are stored during the course of the test, and upon execution of a new running at the end of Stage 2, the operator is asked about any change in material or specimen characteristics.

For most tests, the data are taken at every 0.5 s during the loading portion of the test. During the partial unloadings, the

Fig. 2—Computer program flow chart for Stages 1 and 2 of automated testing procedure

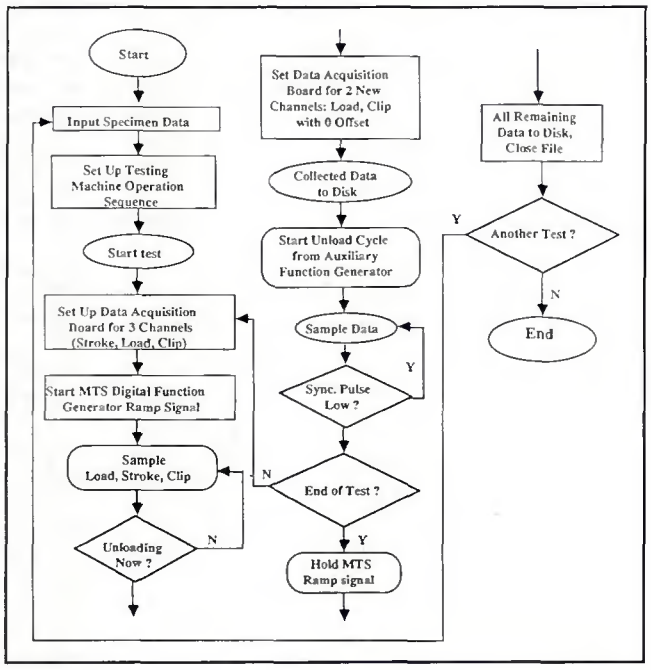

data are taken at a rate of 15/s.

The posttest data analysis may be subdivided into two steps: data reduction to calculation of fracture parameters, and plotting of results. The objective of the data reduction computer program is to:

1) Determine the clip-gauge and load coordinates corresponding to each unloading.

2) Calculate the areas under the load-load displacement curve up to each unloading point.

3) Determine the slope of each unloading curve.

4) Find the load and clip-gauge coordinates corresponding to the point defined in BS 5762-79 as the critical value of CTOD.

The areas are measured by a single trapezoidal rule using incremental displacements of approximately 0.01 mm.

Crack lengths are measured using the elastic unloading compliance technique. The unloading compliance technique is difficult to apply, largely due to the restrictions on the required accuracy of the compliance determination. With nonwelded metals, such resolution is achievable relatively easily. In weldments, microstructural, chemical and stress gradients complicate the determination. Assessment of weldments is therefore a critical test of the system. The equipment described has proved to be repeatably accurate, even when weld metals with mechanical properties varying from the root region to the cap pass were assessed.

The compliance relationship expressions used for the SENB and CTS specimens (Fig. 3) are those originally proposed by Saxena and Hudak (Ref. 6) and Tada, *et al.* (Ref. 7), and subsequently modified by Willoughby (Ref. 8). For the particular case of SENB specimens, the expression takes the following form:

$$\frac{a}{W} = 0.99265 - 3.81662\,u - 1.80596\,u^2 + 32.3104\,u^3 - 44.1566\,u^4 - 52.6788\,u^5$$

For CTS specimens, the Willoughby modified expression for determining crack length via the compliance is:

$$\frac{a}{W} = 1.00196 - 4.06319\,u + 11.242\,u^2 - 106.043\,u^3 + 464.335\,u^4 - 650.677\,u^5$$

where:

$$u = \frac{1}{\left(\frac{EB}{(1 + 1.7\,(z/W))}\frac{\Delta V}{\Delta P}\right)^{1/2} + 1}$$

and $\Delta V/\Delta P$ = elastic compliance.

When sidegrooved specimens are used, the specimen thickness B is replaced by an effective thickness B_e[9], defined by:

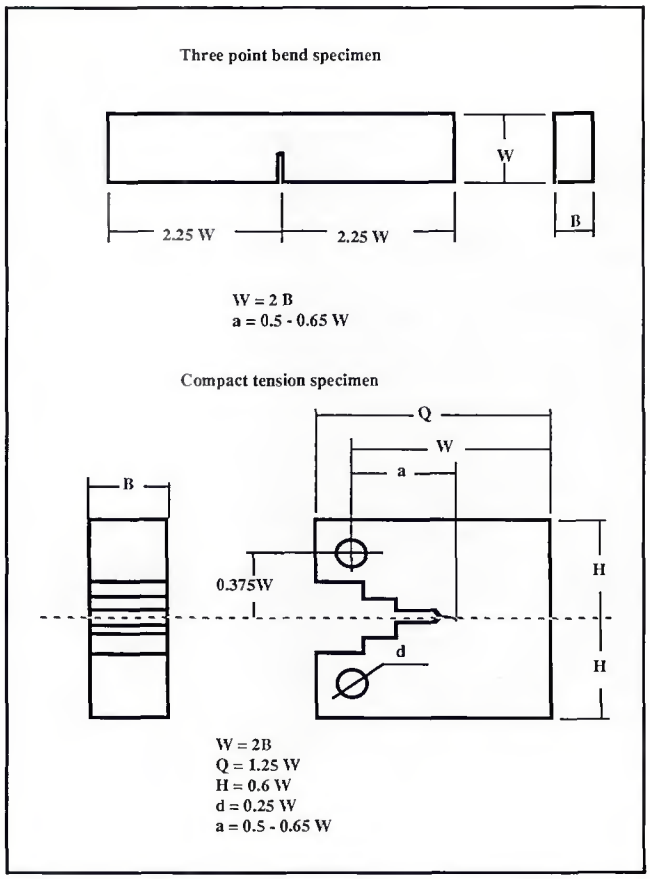

Fig. 3 — Three-point bend and compact-tension-type specimens

$$B_e = B - \left(\frac{B - B_n}{B}\right)^2$$

where B_n = net section thickness of sidegrooved specimen.

Compliance is calculated by a linear regression analysis of data obtained from the high-gain amplifiers during elastic unloading.

The J_{Ic} values are determined according to ASTM E813-81 (Ref. 2); and critical (δ_c) and at initiation (δ_i) CTOD values are determined according to BS 5762-79 (Ref. 1).

Experimental Procedure

To evaluate the system performance, results from ASTM A36 steel in both the base metal and weld metal made with a narrow-groove GMAW process, and weld metal samples made with a SMAW process using AWS E8018-C1-type consumables, were obtained. Table 1 lists plate and filler metal chemistries of the materials.

The narrow-groove test pieces of A36 steel were fabricated from 38-mm (1.5-in.) thick plates — Fig. 4. The overall dimensions were 1200 mm (47.2 in.) long by 420 mm (16.5 in.) wide. Six 38-mm by 100-mm (4-in.) restraint bars were installed on the back side to maintain flatness and ensure uniformity of the joint configuration during weld operation. A 10-mm (0.4-in.) thick backing bar was used. The joint itself was a square butt design with a 13-mm (0.5-in.) root opening.

Welding of the test specimen was carried out in the flat position using a high-speed, rotating-arc GMAW process — Fig. 5. Rotation of the welding gun guide tube at 50 Hz or more in conjunction with an eccentric filler wire exit at the contact tube ensures excellent sidewall fusion with a single-pass (mono-pass) procedure. Automatic joint tracking and constant electrode extension are produced electronically via arc voltage readings during each rotation of the arc. The

Table 1—Typical Chemical Compositions

Material	%C	%Cr	%Ni	%Mo	%P	%S	%Mn	%Si
A36	0.24	—	—	—	0.02	0.02	1.00	0.25
Linde 82	0.10	—	—	—	0.017	0.024	1.15	0.60
E8018 C1	0.12	—	2.37	—	0.03	0.04	1.2	0.70
E7018	0.03	0.02	—	0.01	0.01	0.01	0.40	0.30

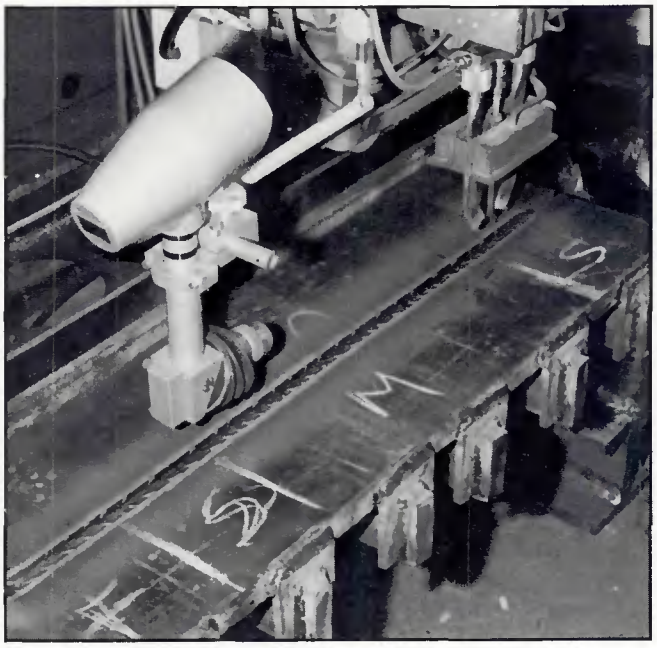

Fig. 4 — Welded test pieces of A36 steel

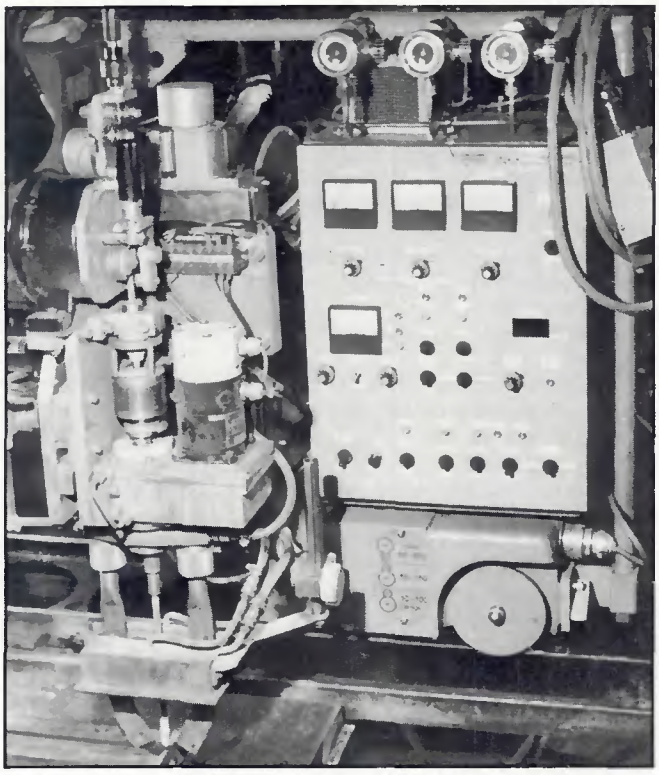

Fig. 5 — High-speed rotating-arc GMAW welding machine

procedural conditions are listed in Table 2. Preheating and interpass temperatures were monitored with Tempil® stick. The PWHT was done with the restraint bars in place.

Compact tension and three-point-bend-type specimens 30 mm thick were prepared from base metal, weld metal and heat-affected zone.

A second set of samples from welded joints made with a conventional SMAW process using AWS E8018-C1-type electrodes was also tested. The welded joints were obtained from 330-mm (13-in.) long by 293-mm (11.5-in.) wide, 25-mm (1-in.) thick plates. One 75-mm by 25-mm (3-in. by 1-in.) restraint bar was installed on each side to maintain flatness and ensure uniformity during the welding operation — Fig. 6. Two different joint geometries and welding conditions were used, R-A and R-B, respectively.

Fig. 6 — Jig configuration and joint geometries from samples R-A and R-B

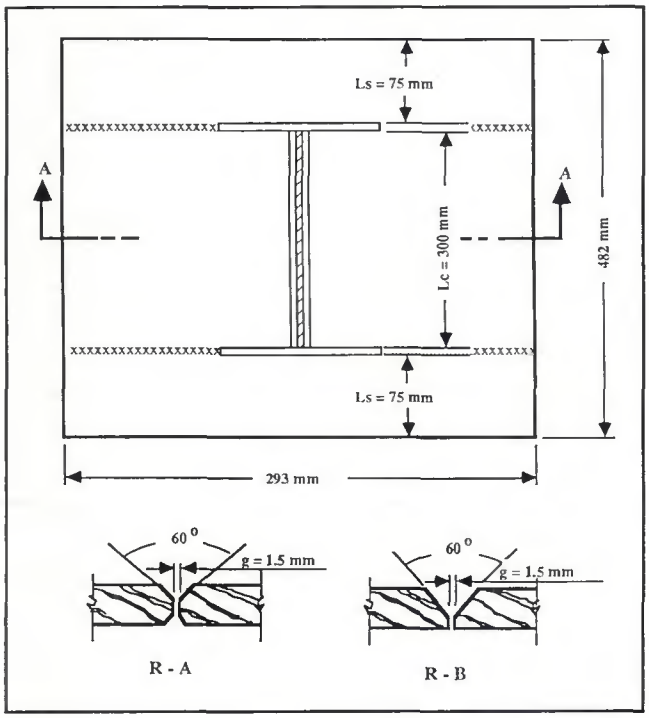

The R-A samples were produced using a double-V groove joint design. One root pass was performed on each side using a 3.2-mm (0.125-in.) AWS E6018-type consumable. The fill passes were made with 4-mm (0.16-in.) E8018-C1 electrodes using a two-pass-per-layer technique to the completion of the joint. Welding operation was performed at −30°C (−22°F) as part of a project to develop repair techniques for Arctic structures.

The R-B samples were welded at room temperature (68°F) using a single-V-groove joint design. All passes were made with E8018-C1 electrodes with a 3.2-mm electrode diameter for the root passes and a 4-mm diameter for the fill passes. Again, a two-pass-per-layer procedure was used.

In order to reproduce severe repair conditions (common in cold weather *in situ* jobs), no preheat, interpass temperature limit or postweld heat treatment was used for either R-A or R-B sample. The toughness behavior resulting from these conditions assessed the performance of the proposed test procedure when a low-ductility situation is present. The overall welding conditions are shown in Table 2.

All the specimens were machined according to BS 5762-79 (Ref. 1) and ASTM E813-81 (Ref. 2) and fatigue precracked before testing. In all cases, the

initial crack length to width ratio (a_o/w) was equal to 0.6. After precracking, the samples were side-grooved in 20% of the thickness.

The specimens were tested under stroke control conditions at static rates (<0.01 W/min) at room temperature (Fig. 7) utilizing the computer-controlled unloading compliance technique. After the test, the specimens were heat-tinted and broken open to measure the initial crack length and final crack extension for comparison with those obtained from the automated procedure.

Results and Discussion

Figure 8 shows a typical J-R curve obtained from the narrow-groove and R-B welded samples and the procedure utilized for the evaluation of J_i (value of J at the onset of crack propagation). The black dots indicate points of evaluation corresponding to each unloading.

A typical CTOD versus Δa curve obtained from the same specimens is shown in Fig. 9. The value of CTOD at the onset of crack propagation, δ_i, was evaluated from the intersection of the δ-Δa curve and the blunting line $\delta = 2\Delta a$.

The values of J_i, δ_i and δ_c, evaluated according to ASTM E813-81 and BS 5762-79, respectively, are in Table 3.

All tested materials showed good fracture toughness results, except for R-A samples, where a low-temperature (−30°C) welding procedure was used in conjunction with the E6018 root pass electrode. Although different zones of the narrow-groove samples were tested (base metal, HAZ, weld metal), no significant differences were obtained in the fracture parameters at initiation (J_i and δ_i). The critical values of CTOD, δ_c, showed that the base metal, heat-affected zone and weld metal have high values of fracture toughness, as would be expected in A36 at ambient temperature. All the critical values were of the δ_m type, corresponding at the first point of attainment of maximum load after a certain amount of stable crack growth.

The R-A samples showed lower toughness behavior, as would be expected from the welding procedure employed. Due to the small amount of stable crack growth obtained in such cases, the ability of the data acquisition, computing and electronic systems to determine fracture parameters within prescribed accuracy limits required by standard methods is critical. As can be seen in Table 3, the assessment of fracture toughness values at initiation was not possible in any case, but the critical values of CTOD according to BS 5762-79 (δ_u, δ_c) could be evaluated.

Specimen R-A1 showed a δ_c-type fracture behavior (instability without previous stable crack growth), and specimens

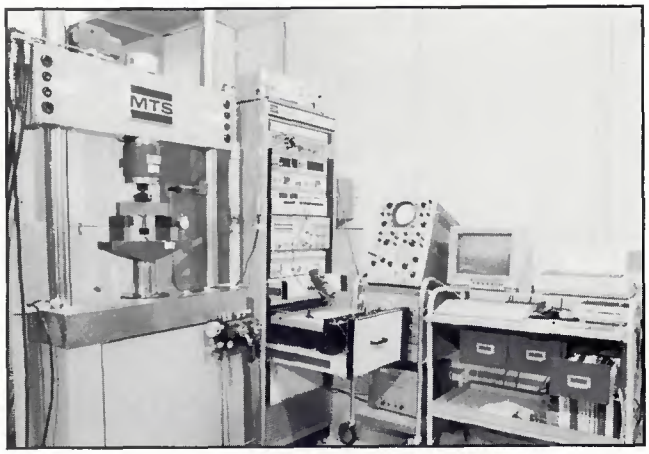

Fig. 7 — General view of testing equipment

Table 2—Welding Conditions

Welding Method	Narrow Groove	R-A (root)	R-A	R-B (root)	R-B
Process	GMAW	SMAW	SMAW	SMAW	SMAW
Electrode	Linde 82	E7018	E8018C1	E8018C1	E8018C1
Diameter (mm)	1.2	3.2	4.0	3.2	4.0
Preheat temp. (°C)	100	–	–	–	–
Voltage (V)	32 Elec.+	22 Elec.+	22.5 Elec.+	22 Elec.+	22 Elec.+
Current (A)	300 DC	130	180 DC	130	176 DC
Welding speed (mm/min)	225	180	180	180	180
Welding gun rotation (Hz)	50	–	–	–	–
Shielding gas	Ar-20%CO_2	–	–	–	–
Interpass limits (°C)	100–120	–	–	–	–
PWHT temp. (°C)	650 for 2 h	–	–	–	–

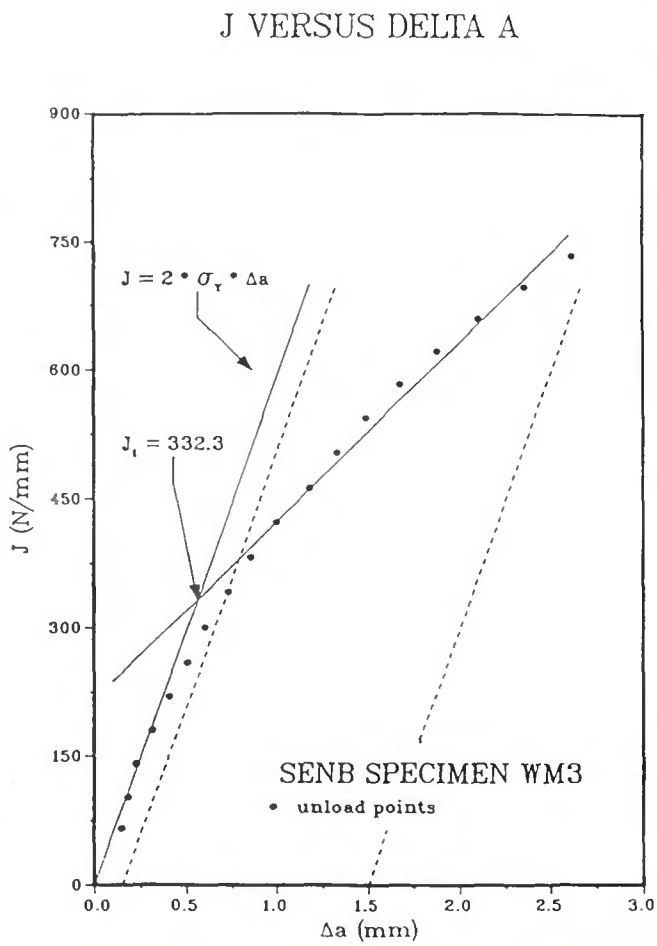

Fig. 8 — Typical J versus crack extension (J-R) curve

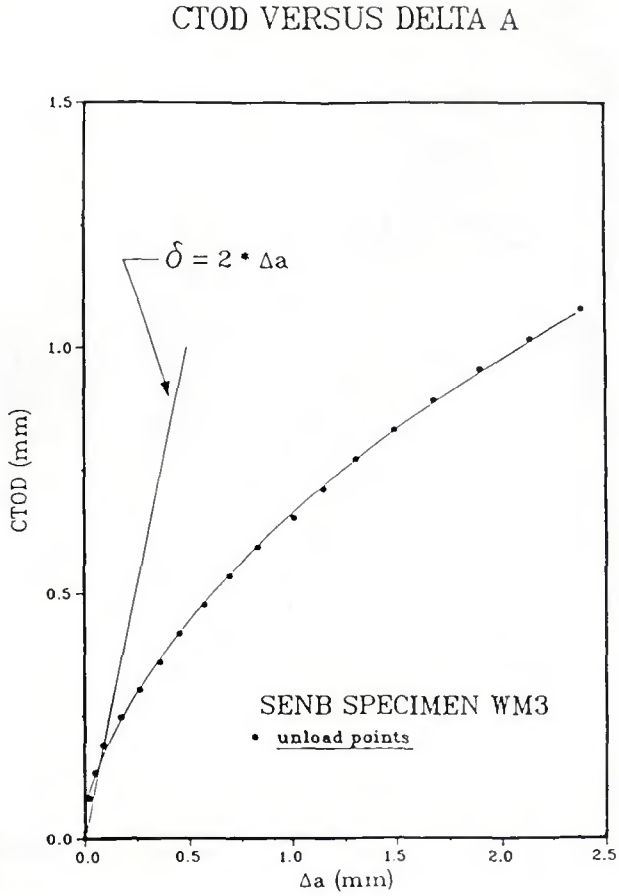

Fig. 9 — Typical CTOD versus crack extension (δ-R) curve

R-A2 and R-A3 showed a δ_u type (instability after development of a small amount of stable crack growth). This brittle behavior is caused by the weld metal microstructures resulting from the low-temperature welding operation (−30°C without preheat, PWHT or interpass temperature controls).

On the other hand, for the R-B samples utilizing the same welding conditions, but welded at room temperature, the achievement of a full R-curve was possible. This fact allowed assessment of J_i and δ_i, as well as the critical CTOD values (δ_c).

Conclusions

1) The present system allowed an estimation of J_i, δ_i and the critical value of CTOD (δ_c), according to ASTM E813-81 and BS 5762-79, respectively. These values were obtained simultaneously with the completion of the test.

2) The results show that useful values of fracture toughness may be obtained even if materials with different behavior (from brittle to ductile) are tested, including weld metals with both types of behavior within specimen thickness.

3) The Commodore 128 system is ideal for a low-cost system where no equipment is in place. Furthermore, reduction in cost can be obtained implementing the present automated testing procedure on a Commodore 64 minicomputer.

Acknowledgments

The authors wish to thank the Consejo Nacional de Investigaciones Científicas y Técnicas (Argentina) and the International Development and Research Center in Ottawa (Canada) for financial support of this project. They also wish to thank the following personnel at the University of Alberta, without whose help the project would not have succeeded. In the Department of Mining, Metallurgical and Petroleum Engineering: Clark Bicknell, Rob Stefaniuk, Doug Booth and Jack Gibeau. In the Department of Mechanical Engineering: Dr. D. G. Bellow and Ian Buttar.

Table 3—Fracture Results

Specimen	Specimen Type	B (mm)	J_i (N/mm)	δ_i (mm)	δ_c (mm)
WM 1	CT	30	284.4	0.2330	δ_m = 0.6254
WM 3	SENB	30	332.3	0.2531	δ_m = 0.5935
HAZ 1	CT	30	234.4	0.2118	δ_m = 0.6247
BM 2	CT	30	290.46	0.1493	δ_m = 0.9044
R-A 1	SENB	20	—	—	δ_c = 0.0774
R-A 2	SENB	20	—	—	δ_u = 0.2377
R-A 3	SENB	20	—	—	δ_u = 0.2175
R-B 1	SENB	20	512.8	0.16078	δ_m = 0.5953

Appendix

Fracture Mechanics Assessment

CTOD Test Method

The experimental determination of CTOD (Ref. 10) is based on an expression developed by Dawes (Ref. 11), in which the elastic and plastic components are calculated

$$\delta = \frac{K^2 (1 - \nu^2)}{2\, \sigma_y\, E} + \frac{0.4\,(W - a_o)\, V_p}{0.4\, W + 0.6\, a_o + z} \qquad \text{(A-1)}$$

where K = stress intensity factor, σ_y = flow stress $[(\sigma_{ys} + UTS)/2]$, E = Young's modulus, ν = Poisson's ratio, V_p = plastic component of clip-gauge displacement, a_o = initial crack length, and z = knife-edge height about test piece surface.

The elastic component of the CTOD is expressed as a function of the stress intensity factor. An additive plastic component is then calculated from the plastic component of the clip-gauge displacement. The value of V_p is estimated by an analytical method based on elastic compliance relationships (Refs. 6, 8)

$$V_p = V_g - V_e$$

where V_g is the total clip-gauge displacement, and for single-edge notched bend specimens (SENB):

$$V_e = \frac{24\, P\, (1 - \nu^2)\, (1 + 1.7\, z/W)}{BE} \frac{a_o}{W} \left[0.76 - 2.28 \left(\frac{a_o}{W}\right) + 3.87 \left(\frac{a_o}{W}\right)^2 - 2.04 \left(\frac{a_o}{W}\right)^3 + \frac{0.66}{\left(1 - \frac{a_o}{W}\right)^2}\right] \qquad \text{(A-2)}$$

and for compact tension specimens (CTS):

$$V_e = \frac{P\, (1 + 1.7\, z/W)}{BE} \left(\frac{1 + a_o/W}{1 - a_o/W}\right)^2$$

$$[2.1163 + 12.219\left(\frac{a_o}{W}\right) - 20.065\left(\frac{a_o}{W}\right)^2 - 0.9925\left(\frac{a_o}{W}\right)^3 + 20.609\left(\frac{a_o}{W}\right)^4 - 9.9314\left(\frac{a_o}{W}\right)^5] \quad \text{(A-3)}$$

The value of CTOD at the onset of crack propagation, δ_i, is found from the least squares fit line of the CTOD values corresponding to different amounts of stable crack growth, and an approximate blunting line defined by

$$\delta = 2\ \Delta a$$

The critical CTOD value, δ_c, is calculated from BS 5762-79 guidelines.

J-Integral Test Method

The J-integral constitutes a direct extension of linear-elastic analysis in nonlinear elastic materials (Refs. 12–15). The estimation procedure developed by Rice (Ref. 16) uses the area under the load versus load-line displacement curve for the evaluation of J. The value of J corrected for the effects of crack extension occurring during the test can be calculated from the expression

$$J_{i+1} = [J_i + \left(\frac{\eta}{W - a_o}\right) i \frac{A_{i;i+1}}{B_n}] [1 - \left(\frac{\gamma}{W - a_o}\right)(a_{i+1} - a_i)] \quad \text{(A-5)}$$

where, $\eta = 2$ for SENB, $\eta = 2 + 0.522\ (W - a)/W$ for CTS, $\gamma = 1$ for SENB, $\gamma = 1 + 0.76\ (W - a)/W$ for CTS, and $A_{i+1;i}$ = area under load versus load line displacement record between lines of constant displacement at points 'i' and 'i + 1'.

The value of J_{Ic} is found from the intersection of the least-squares fit line of the J-integral points and an approximate blunting line defined by

$$J = 2\sigma_y \Delta a \quad \text{(A-6)}$$

where Δa is the crack extension (Ref. 17).

References

1. BS 5762-79. 1979. *Method for Crack Opening Displacement COD Testing.* British Standards Institution.
2. ASTM E813-81. 1981. *Standard Test for J_{Ic}: A Measure of Fracture Toughness.* ASTM.
3. Clarke, G. A., and Brown, G. M. 1980. Computerized methods for J_{Ic} determination using unloading compliance technics. *ASTM STP 710,* pp. 110–126.
4. Van derSluys, W. A., and Fufato, R. J. 1983. Computer controlled single specimen J test. *ASTM STP 803,* pp. 464–482.
5. Joyce, J. A. and Godus, J. J. Elastic-plastic fracture. ASTM, STT668, p. 451–468, 1979.
6. Saxena, A., and Hudak, S. J. 1978. Review and extension of compliance information for common crack growth specimens. *International Journal of Fracture* 14, pp. 453–468.
7. Tada, H., Paris, P. C., and Irwin, G. R. *The Stress Analysis of Cracks Handbook.* Del Research Corp.
8. Willoughby, A. A. 1981. On the unloading compliance method of deriving single specimen R-curves in three point bending. *The Welding Institute Research Report No. 153.*
9. Shih, C. F., deLorenzi, H. G., and Andrews, W. R. 1977. Elastic compliances and stress intensity factor for side-grooved compact specimens. *International Journal of Fracture* 13, pp. 544–548.
10. Burdekin, F. M., and Stone, D. E. 1966. The crack opening displacement approach to fracture mechanics in yielding materials. *J. of Strain Analysis* 1 (2):145–153.
11. Dawes, M. G. 1979. Elastic plastic fracture toughness based on the COD and J-contour integral concepts. *Elastic Plastic Fracture, ASTM STP 669,* pp. 307–333.
12. Hutchinson, J. W. 1968. Singular behavior at the end of tensile crack in a hardening material. *Journal of the Mechanics and Physics of Solids* 16(1).
13. Rice, J. R., and Rosengren, C. F. 1968. Plain strain deformation near a crack tip in a power law hardening material. *Journal of the Mechanics and Physics of Solids* 16(1).
14. Beagley, J. A., and Landes, J. D. 1972. The J integral as a fracture criterion. *ASTM STP 514,* pp. 1–23.
15. Landes, J. D., and Beagley, J. A. 1972. The effect of specimen geometry on J_{Ic}. *ASTM STP 514,* pp. 24–39.
16. Rice, J. R. 1968. A path independent integral and the approximate analysis of strain concentration by notches and cracks. *Journal of Applied Mechanics* 35, pp. 379–386.
17. Clarke, G. A., Andrews, W. R., Beagley, J. A., Donald, J. K., Embley, G. T., Landes, J. D., McCabe, D. E., and Underwood, J. H. 1979. A procedure for the determination of ductile fracture toughness values using J integral technics. *Journal of Testing and Evaluation* 7(1): 49–56.