A Study on an Arc Sensor for Gas Metal Arc Welding of Horizontal Fillets

An S-shaped fillet weld was successfully tracked using the quadratic curve-fitting method for sensing

BY J. -W. KIM AND S. -J. NA

ABSTRACT. The weld joint tracking sensor is indispensable for improving the flexibility of arc welding robot applications. Recently, some sensing methods that utilize the electric arc signal, or more correctly the welding current in GMA welding, have been developed and are prevalently in use. The welding current is directly affected by the contact tip-to-workpiece distance for the given welding voltage and wire feed speed. Armed with a means of measuring the welding current, the tip-to-workpiece distance and then the weld joint geometry can be obtained by weaving the arc back and forth across the line of travel. Knowledge of the weld joint geometry relative to the welding gun permits the welding gun to trace the joint.

In this study, the welding current signal was fitted to a curve, which is inversely proportional to the trace of contact tip-to-workpiece distance by using the quadratic curve-fitting method in order to extract useful information on the welding gun position from the welding current signal. Furthermore, the availability of the curve-fitted welding current signal was investigated and a joint tracking system for horizontal fillet joints was developed by using this curve-fitting method.

Introduction

Fusion welding is a joining method chosen mainly for assembling large metal structures such as ships, bridges, pipelines, heavy construction machinery, rolling stocks, and cars. Among the variety of fusion welding processes available, the gas metal arc welding (GMAW) process is one of the most frequently used methods, primarily because it is highly suited to a wide range of applications, and also to automation. GMAW is an arc welding process that produces a coalescence of metals by heating them with an arc established between the continuous filler metal electrode and workpiece.

With the combination of extensive application areas and low manual productivity resulting from the hostile nature of welding environments and extreme physical demands, it is not surprising that arc welding is considered as having one of the greatest potentials for the application of industrial robots or mechanized equipment. However, robotic welding machines in themselves cannot cope with wide variations in joint fitup or workpiece position. So the weld joint tracking sensor is indispensable for improving the flexibility of arc welding robot applications.

Recently, some sensing methods that utilize the electric arc signal, or more correctly the welding current in GMA welding, have been developed and are prevalently in use (Refs. 1–5). A number of problems related to the automatic tracking of the weld joint include the modeling, sensing and control of the welding system. The welding current is directly affected by the contact tip-to-workpiece distance for the given welding voltage and wire feed speed. Armed with a means of measuring the welding current, the tip-to-workpiece distance and then the weld joint geometry can be obtained by weaving the arc back and forth across the line of travel. Knowledge of the weld joint geometry relative to the welding gun permits the welding gun to trace the joint.

Although a fillet weld cross-section has a right-angled shape in general, the weld groove may have a round shape during arc welding because of the effect of molten pool motion and the arc pressure (Refs. 6, 7). By this phenomenon, the resultant mean values of the welding current may show a trace with ripples as in Fig. 1.

In this study, the welding current signal was fitted to a curve that is inversely proportional to the trace of contact tip-to-workpiece distance under the arc by using the quadratic curve-fitting method in order to extract a useful information of the torch position from the welding current signal. Furthermore, the availability of the curve-fitted welding current signal was investigated and a joint tracking system for horizontal fillet joints was developed by using this curve-fitting method.

It was revealed that the trace of tip-to-workpiece distance could be well defined from the curve-fitted welding current signal, and that the weld joint tracking capability of the developed system is sufficient for practical applications.

Prediction of Groove Shape

In GMA welding systems, the power source has a flat or constant voltage characteristic. The major reason for selecting the constant voltage power source is the self-correcting arc length inherent in this system. The constant voltage system compensates for the variation of the contact tip-to-workpiece distance, which readily occurs during welding by automatically supplying the increased or decreased welding current to maintain the desired arc length. It is well known that the welding current increases or decreases as the tip-to-workpiece distance decreases or increases, respectively.

Generally, the groove of a fillet weld is initially prepared to have a right-angled shape, but the groove tends to have a round shape during arc welding because of the effect of molten pool motion and the arc pressure. Thus, the welding current signal due to the contact tip-to-workpiece distance variation can be expected to be a curve, which is inversely proportional to the trace of the tip-to-workpiece distance during arc weaving. Figure 1 schematically illustrates the relationship between the trace of the welding

KEY WORDS

GMAW
Arc Sensor
Horizontal Fillet Welds
Robotics
Joint Tracking System
Welding Gun Position
Modeling
Curve-Fitting Method
Automation

J. -W. KIM is a Ph.D. Candidate and S. -J. NA is an Associate Professor at the Korea Advanced Institute of Science and Technology, Department of Production Engineering, Seoul, Korea.

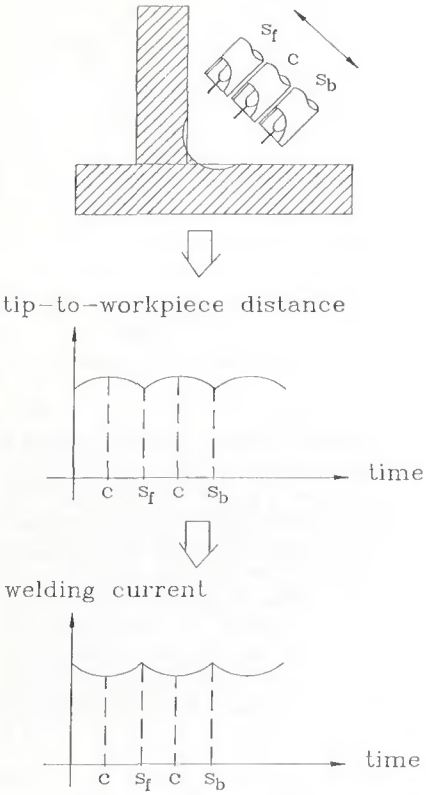

Fig. 1—Conception of relationship between contact tip-to-workpiece distance and welding current.

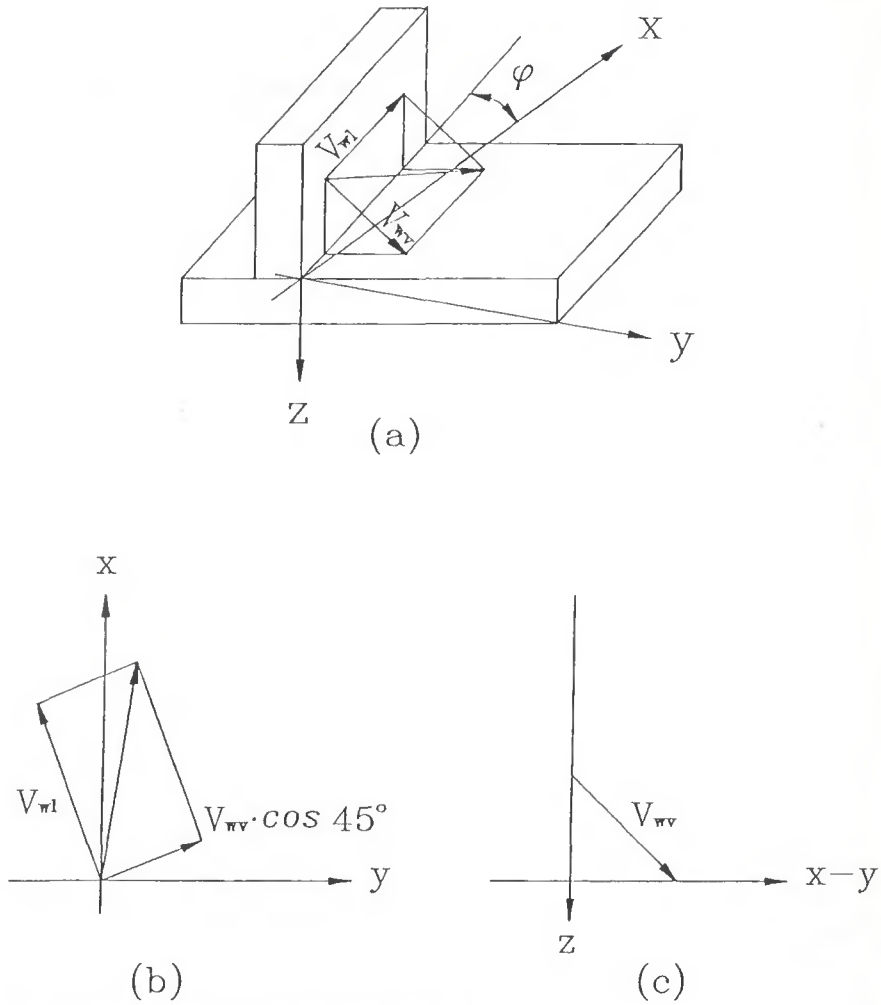

Fig. 2—Determination of x-, y- and z-axis velocites.

gun position and the expected welding current signal.

In the real situation, the welding current shows a signal with fluctuations due to the metal transfer, arc characteristics and so on. For acquiring the information of the gun position from the welding current, other researchers (Refs. 8, 9) usually used a moving-averaged welding current signal. A kind of the moving-averaging method is like as follows.

$$\bar{I}(n+1) = (1-\sigma)\bar{I}(n) + \sigma\, I(n+1) \qquad (1)$$

where $\bar{I}(n+1)$ = new averaged value, $\bar{I}(n)$ = old averaged value, $I(n+1)$ = measured welding current value, and σ = weighting factor

This is also a kind of low-pass filtering method. Since this moving-averaging method has the advantage to easily determine the cut-off frequency by changing the weighting factor, it can be effectively used together with a low-pass filter circuit of hardware, which has a fixed cut-off frequency. But the fluctuation in the averaged signal still remains, and in addition to this, some time lag arises, which may exert a bad influence on predicting the welding gun position.

In this study, therefore, the signal was fitted to a curve that is inversely proportional to the trace of contact tip-to-workpiece distance for extracting useful information on the gun position from the welding current signal. A quadratic curve fitting was performed by using the least square method. A curve-fitted equation is given in the following expression.

$$I = k_0 + k_1 t + k_2 t^2 \qquad (2)$$

where I = welding current (A), t = time (s) and k_0, k_1, k_2 = constants.

Letting i_n be the measured welding current value at the time t_n, where n = 0, 1, . . . , m, the following simultaneous equations can be derived by the least square method:

$$\sum_{n=0}^{m} i_n = k_0 \sum_{n=0}^{m} 1 + k_1 \sum_{n=0}^{m} t_n + k_2 \sum_{n=0}^{m} t_n^2$$

$$\sum_{n=0}^{m} t_n i_n = k_0 \sum_{n=0}^{m} t_n + k_1 \sum_{n=0}^{m} t_n^2 + k_2 \sum_{n=0}^{m} t_n^3$$

$$\sum_{n=0}^{m} t_n^2 i_n = k_0 \sum_{n=0}^{m} t_n^2 + k_1 \sum_{n=0}^{m} t_n^3 + k_2 \sum_{n=0}^{m} t_n^4 \qquad (3)$$

Using the matrix form, Equation 3 can be expressed as follows:

$$\begin{matrix} \sum i_n \\ \sum t_n i_n \\ \sum t_n^2 i_n \end{matrix} = \begin{matrix} T_0 & T_1 & T_2 \\ T_1 & T_2 & T_3 \\ T_2 & T_3 & T_4 \end{matrix} \begin{matrix} k_0 \\ k_1 \\ k_2 \end{matrix} \qquad (4)$$

where $T_0 = \Sigma\ 1$, $T_1 = \Sigma\ t_n$, $T_2 = \Sigma\ t_n^2$, $T_3 = \Sigma\ t_n^3$, and $T_4 = \Sigma\ t_n^4$. Then, the unknown coefficients, k_0, k_1, and k_2 can be determined by the following equation:

$$\begin{matrix} k_0 \\ k_1 \\ k_2 \end{matrix} = \begin{matrix} T_0 & T_1 & T_2 \\ T_1 & T_2 & T_3 \\ T_2 & T_3 & T_4 \end{matrix}^{-1} \begin{matrix} \sum i_n \\ \sum t_n i_n \\ \sum t_n^2 i_n \end{matrix} \qquad (5)$$

If one sweeping time of weaving and the sampling rate of the signal measurements are fixed, the number of the measured current value is determined as a constant m + 1. Then T_0, T_1, ... T_4 can be calculated as follows by representing t_0, t_1, ... t_m to 0, 1, ... m, respectively (Ref. 10).

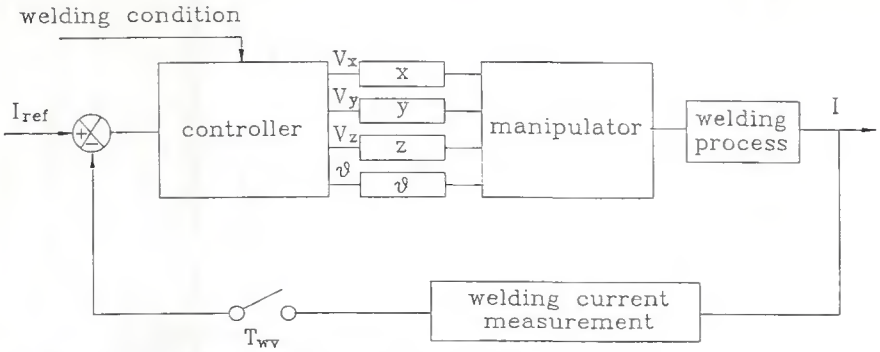

Fig. 3—Schematic block diagram of joint tracking system.

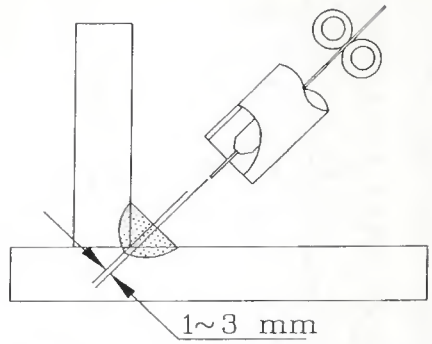

Fig. 4—Welding gun position for horizontal fillet welding.

$$T_0 = \sum_{n=0}^{m} 1 = m + 1$$

$$T_1 = \sum_{n=0}^{m} t_n = m^2/2 + m/2$$

$$T_2 = \sum_{n=0}^{m} t_n^2 = m^3/3 + m^2/2 + m/6 \qquad (6)$$

$$T_3 = \sum_{n=0}^{m} t_n^3 = m^4/4 + m^3/2 + m^2/4$$

$$T_4 = \sum_{n=0}^{m} t_n^4 = m^5/5 + m^4/2 + m^3/3 - m/30$$

Consequently, the elements of the square and inverse matrix are calculated before starting the welding, so that the curve-fitted welding current signal can be quickly determined at the time just after terminating one sweep of weaving. This curve-fitted welding current signal can be applicable for estimating the contact tip-to-workpiece distance and then for developing a joint tracking system.

Joint Tracking System for Horizontal Fillet Joints

A computer-controlled four-axis motion table was used for weld joint tracking experiments, where x- and y-axes were driven for weld line and weaving direction, z-axis for weaving direction, and rotating axis (θ-axis) for maintaining the position of the welding gun perpendicular to the weld line. If the arc center is on the extension line of θ-axis, this rotating axis can be independently driven with the perpendicular three-axes (x-, y- and z-axes), because the welding position is not affected by the rotating motion of θ-axis.

The summation of the respective axis velocity vectors must coincide with the summation of welding and weaving velocity vectors. If the weaving direction is inclined with z-axis of 45 deg, the respective axis velocity, V_x, V_y and V_z are represented as follows by the welding speed (V_{wl}) and weaving speed (V_{wv})—Fig. 2.

$$V_x = V_{wl} \cos\phi + V_{wv} \sin\phi / \sqrt{2}$$
$$V_y = -V_{wl} \sin\phi + V_{wv} \cos\phi / \sqrt{2} \qquad (7)$$
$$V_z = V_{wv} / \sqrt{2}$$

where ϕ is the angle between the x-axis and weld line. The respective speeds of the pulse motors were determined by a personal computer and transferred through the digital-to-analog converter and voltage-to-frequency converter to the motor driver. The speed of the rotating axis was fixed at a given value, and the θ-axis rotated to the determined angle, which was equivalent to the number of pulses transferred to the motor driver.

It is known that the relationship between the welding current and contact tip-to-workpiece distance is nearly linear around the appropriate operating conditions in GMA welding (Ref. 9). The following equation represents this relationship:

$$I = -\alpha L + \beta \qquad (8)$$

where L = contact tip-to-workpiece distance (mm) and α, β = constants, which can be obtained experimentally. From the variation of welding current, which is the difference between the reference and measured welding current, the variation of tip-to-workpiece distance is estimated as follows:

$$\Delta L = -\Delta I/\alpha \qquad (9)$$

Therefore, if the center position of the weaving path is apart from the weld joint line, the welding current at the turning point of weaving in the nearer side will increase because of the shortened contact tip-to-workpiece distance. In this study, one sweep time (T_{wv}) of weaving was fixed as a value of dividing the weaving width by the desired weaving speed. Using the ΔL, the welding gun position was then corrected by varying the weaving speed. The corrected weaving speed can be expressed by

$$V_{wv} - \Delta L/T_{wv}$$
$$\text{or} \quad V_{wv} + \Delta I/(\alpha \cdot T_{wv}) \qquad (10)$$

where ΔI was estimated at the time just after terminating a sweep of weaving, in other words, at the turning point of the weaving direction.

Considering the first weaving as a motion closing to the horizontal plate, the corrected speed of respective axes are as follows.

$$V_x = V_{wl}\cos\phi + [V_{wv} + \Delta I/(\alpha \cdot T_{wv})] \sin\phi/\sqrt{2}$$
$$V_y = -V_{wl}\sin\phi + [V_{wv} + \Delta I/(\alpha \cdot T_{wv})]\cos\phi/\sqrt{2} \qquad (11)$$
$$V_z = [V_{wv} + \Delta I/(\alpha \cdot T_{wv})]/\sqrt{2}$$

For the second weaving, the sign of the corrected weaving speed must be changed, so that the deviation error of the welding gun position can be corrected.

After one cycle of weaving, the angular error (ω) of the gun position can be estimated as follows:

$$\omega = \tan^{-1}[-\Delta I/(\sqrt{2}\alpha \cdot L_w)] \qquad (12)$$

where L_w is the traversing distance during one cycle of weaving in the weld line direction. Assuming the angular error to be small, then

$$\omega \cong -\Delta I/(\sqrt{2}\alpha \cdot L_w). \qquad (13)$$

The angular position of the welding gun is determined by adding this error to the last position.

$$\phi_i = \phi_{i-1} + \omega \qquad (14)$$

These corrections were repeated every weaving cycle to give the following angu-

Table 1—Welding Parameters Used in the Experiment

Parameter	Welding with Mixed Gas	Welding with CO_2 Gas
Welding voltage (V)	30	32
Welding current (A)	290	340
Welding speed (mm/s)	4	4
Weaving speed (mm/s)	8	8
Weaving width (mm)	4	6

Table 2—Value of Constants

	Welding with Mixed Gas	Welding with CO_2 Gas
α	4.74	5.32
β	393.5	420.1

lar position and speeds.

$$\phi_i = \phi_{i-1} + \omega$$
$$V_x = V_{wl}\cos\phi_i + [V_{wv} + \Delta l/(\alpha \cdot T_{wv})]\sin\phi_i/\sqrt{2}$$
$$V_y = -V_{wl}\sin\phi_i + [V_{wv} + \Delta l/(\alpha \cdot T_{wv})]\cos\phi_i/\sqrt{2} \quad (15)$$
$$V_z = [V_{wv} + \Delta l/(\alpha \cdot T_{wv})]/\sqrt{2}$$

This permits the torch to trace the weld line while maintaining the desired welding speed. At the same time, the angular position of the torch is kept perpendicular to the weld line. The schematic block diagram of the joint tracking system is represented in Fig. 3.

Experiments

The welding current was measured using a shunt resistor connected in series with the power cable. Since the fluctuation of the current signal was large, the signal was modified by a low-pass filter, the cut-off frequency of which was 4 Hz, and the filtered signal was sampled with the frequency of 50 Hz.

For investigating the applicability of the developed joint tracking system, two kinds of shielding gases were used in the experiment: 100% CO_2 and the mixture of 80% Ar and 20% CO_2. For the experiment, the welding conditions selected are shown in Table 1.

The welding current value indicates the one set at the welding machine, the value of which determines the corresponding speed of the wire feed motor. A welding wire of the type AWS ER70S-3 was used for the mild steel workpieces, which were prepared for fillet weld with the weld line straight and S-shaped. The diameter of the welding wire was 1.2 mm (0.045 in.). The welding experiments with the mixed gas and CO_2 gas shielding were performed on the straight weld line, for which the workpiece was initially set to have some angular error to the x-axis. GMA welding with CO_2 gas shielding was carried out also for the S-shaped weld line.

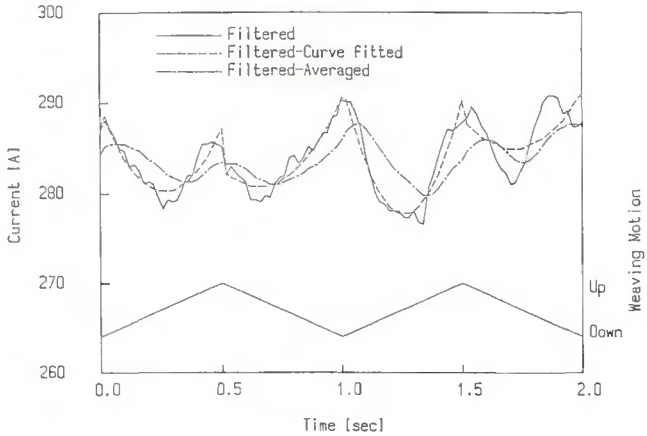

Fig. 5 — Comparison of various welding current signals in welding with a mixed gas (initial angular error = 10 deg).

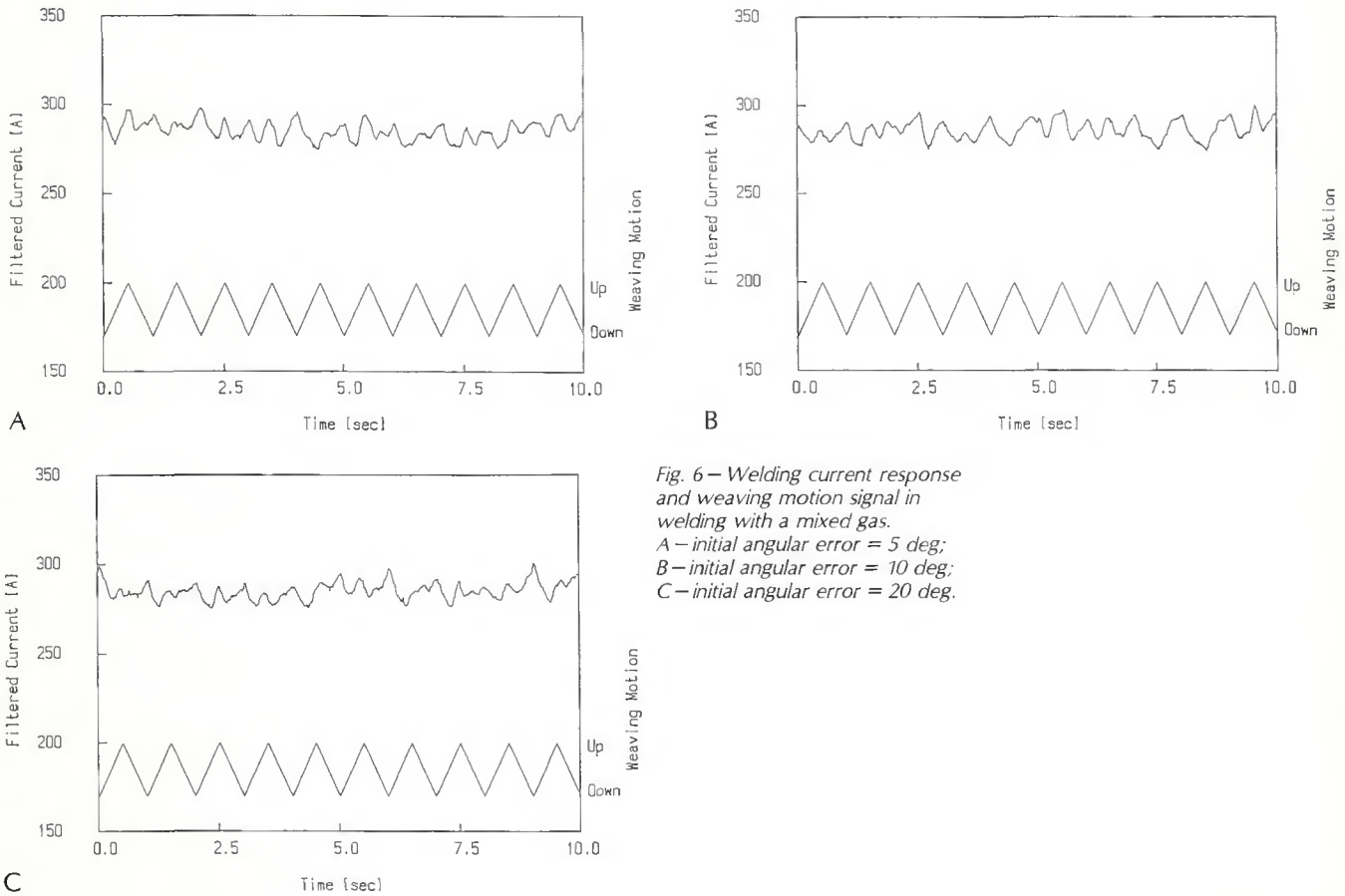

Fig. 6 — Welding current response and weaving motion signal in welding with a mixed gas.
A — initial angular error = 5 deg;
B — initial angular error = 10 deg;
C — initial angular error = 20 deg.

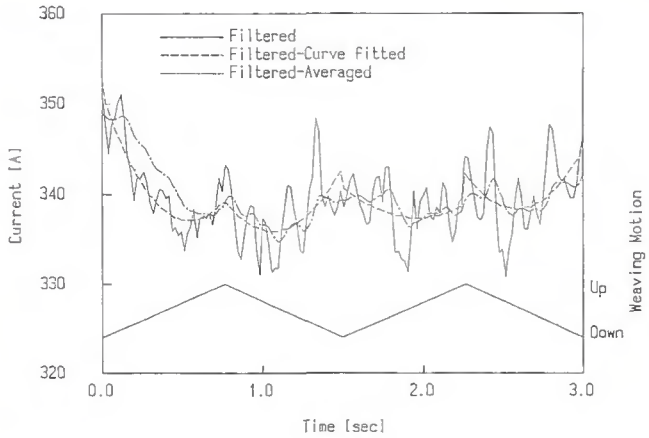

Fig. 7 — Comparison of various welding current signals in welding with CO_2 gas (initial angular error = 10 deg).

Results and Discussion

The constants of Equation 8 were determined by bead-on-plate welding in the flat position for various contact tip-to-workpiece distances, where the operating condition of welding current was around 300 A. The measured welding current values were averaged through the weld time for a constant tip-to-workpiece distance condition, and fitted to a linear equation by the least square method. Determined values of the constants are listed in Table 2.

These values were used for the correction of weaving speed in the joint tracking system by Equation 10. In joint tracking experiments, some technical treatments were introduced for good welds and tracking quality by considering the characteristics of the system and horizontal fillet welding.

In the correction procedure of deviation errors during welding, the dynamics of the pulse motor and manipulator arms were not encountered. The welding area of the arc was not considered as a distributed one, but as a point, so that some error could be expected in the correction term of the weaving speed. Therefore, a gain was introduced that has to be multiplied by the calculated correction term of the weaving speed. If the gain value is too large, the tracking system will be unstable, and the tracking response will be too slow for a small gain. It was found that the gain was appropriate in its range of 1.0 to 1.5 by experiments. There were no large differences in the tracking response for the above range, so that the gain was fixed at the value of 1.2 in both the mixed gas and CO_2 gas welding.

In the horizontal fillet welding, it is preferable to have some deviation of the center position of the welding gun toward the horizontal plate as shown in Fig. 4, because the horizontal plate needs more heat to fuse an appropriate amount of plate than the vertical one (Ref. 11). If the deviation is too small or null, the weld bead tends to show its shape as undercut in the vertical plate and overlap in the horizontal plate. It could be overcome by making the reference current different, *i.e.*, making the reference current of the vertical plate side to be less than that of the horizontal plate side. From the preliminary experiments, the proper difference of the reference current was revealed to be 4 A and 10 A for the welding with mixed gas and CO_2 gas, respectively, where the averaged value of two reference currents was the set value of the

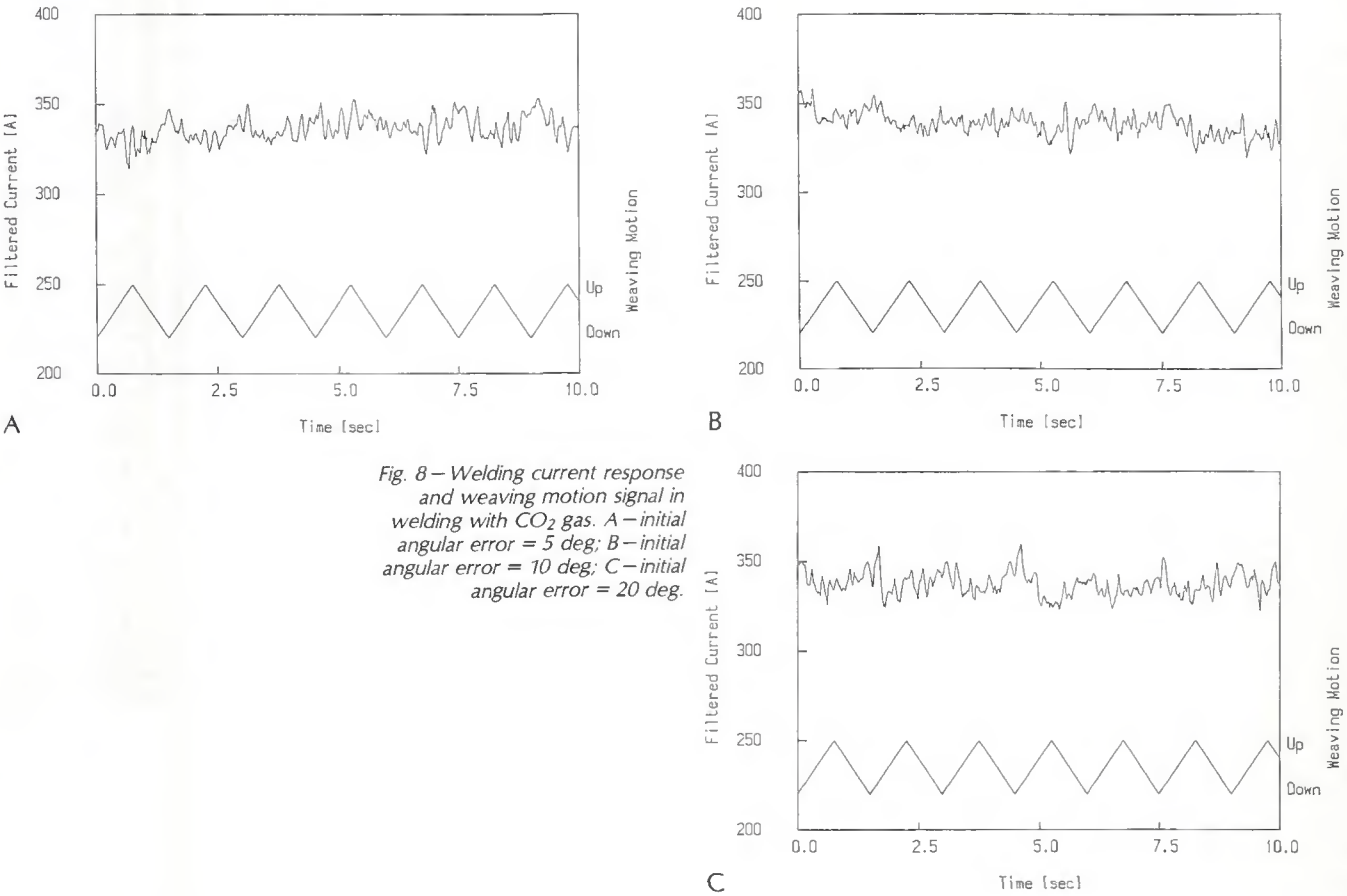

Fig. 8 — Welding current response and weaving motion signal in welding with CO_2 gas. A — initial angular error = 5 deg; B — initial angular error = 10 deg; C — initial angular error = 20 deg.

welding current for the selected welding condition of the respective welding.

The differential effect of determining the angular position of the rotating axis tends to make the θ-axis motion unstable. Thus, the integral effect of estimating the angular position error was encountered for the stable motion of the rotating axis as follows: If the signs of calculated angular errors were equal to each other twice or more times in succession, the motion for compensating the error was performed. However, there was no motion of the rotating axis if the signs of angular errors were changed in turn. The current differences ΔI_h and ΔI_v, which were estimated at the turning point of weaving motions in the horizontal and vertical plate side, respectively, showed some fluctuations in spite of curve fitting the measured signals. So the moving-average method was also applied to the respective current differences throughout the weld line.

The results of the experiment are presented in Figs. 5–9. The welding current response and the signal of weaving direction were presented in Figs. 5 and 6 for the mixed gas welding, and in Figs. 7 and 8 for the CO_2 gas welding.

It can be seen that the curve-fitted current signal is closer to the value of the filtered signal at the end of one sweep weaving than the moving-averaged value in the mixed gas welding—Fig. 5. Moreover, the moving-averaged current signal contains a time lag, which has an unfavorable influence on joint tracking. Generally, it can be concluded that the filtered signal and the filtered and curved-fitted current signal can be well used to determine the welding current at the turning point of weaving motion, and consequently as a control signal for joint tracking. Furthermore, the curve-fitting method has an advantage of compensating the possible fluctuations in the filtered current signal, as can be seen at about the two-second point in Fig. 5. Therefore, the filtered and curve-fitted current signal was used for the joint tracking control in horizontal fillet joints. The signals in Fig. 6 show the variation in the filtered current during the controlled weaving motion along the weld lines with various initial angular errors. There are no large differences in the welding current response according to the various initial angular errors in the mixed gas welding. These signal curves show the excellent tracking capability of the filtered and curve-fitted current signal in the mixed gas GMA welding of horizontal fillets.

In GMA welding with CO_2, however, the fluctuation of the current signal was more severe than that of welding with the mixed gas due to the effect of CO_2 on arc characteristics—Fig. 7. Consequently, it was much more difficult to estimate the contact tip-to-workpiece distance from the welding current signal than in the mixed gas welding. Among the considered three current signals, the filtered and curve-fitted one shows the best capability of defining the welding current at the turning point of the weaving motion, which must have a maximum value in each sweep of the weaving motion. Therefore, from the viewpoint of controlling the signal fluctuation, it is presumed that the application of the curve-fitting method to the welding current signal is more effective in the CO_2 welding than in the mixed gas welding. The signals in Fig. 8 show the variation of the filtered current during the controlled CO_2 GMA welding along the weld lines with various initial angular errors. There are no large differences in the welding current response according to the various initial angular errors, which reveals that the curve-fitting method is very useful also for joint tracking in CO_2 GMA welding of horizontal fillet joints. Figure 9 shows the result of a tracking experiment for the S-shaped workpiece. The workpiece was made of two half sections of a pipe, the outer diameter and wall thickness of which were 156 and 14 mm (6.1 and 0.6 in.), respectively. Figure 9 shows a successful joint tracking for the weld line along the outer and inner surface of the pipe section.

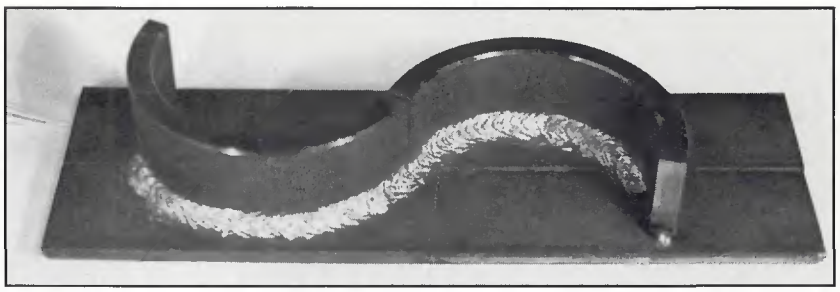

Fig. 9—Photograph of joint tracking result for S-shaped weld line using CO_2 gas shielding.

Conclusion

In order to extract useful information on the welding gun position from the welding current signal, the welding current signal was fitted to a curve that is inversely proportional to the trace of the contact tip-to-workpiece distance by using the quadratic curve-fitting method. The linear relationship between the tip-to-workpiece distance and welding current was determined from various gas metal arc welding experiments.

A simple form of weld joint tracking for horizontal fillet welds was constructed by applying the curve-fitting method to the welding current signal. In the system developed, the weaving speed was controlled to compensate for the deviation error in the welding gun position, and the rotating angle was controlled to compensate for its angular error. Some technical treatments were introduced for good welds and tracking quality, such as the use of a gain, deviation at the center of weaving, and the integral effect for a rotating axis.

It was revealed that the joint tracking capability of the curve-fitting method is sufficient for horizontal fillet welds using both mixed gas and CO_2 in gas metal arc welding. In an effort to control the signal fluctuation, however, the application of the curve-fitting method to the welding current signal was more effective in the welding with CO_2 gas than with the mixed gas.

References

1. Cook, G. E. 1983. Robotic arc welding: research in sensory feedback control. *IEEE Transactions on Industrial Electronics*, Vol. IE-30, (3):252–268.

2. Nomura, H., *et al.* 1987. Automatic real-time bead height control with arc sensor (report 2). *Transactions of the Japan Welding Society*, 18(2):43–50.

3. Fujimura, H., *et al.* 1987. Joint tracking control sensor of GMAW. *Transactions of the Japan Welding Society*, 18(1):32–40.

4. Eichhorn, F., *et al.* 1986. GMA welding of filler passes with a new type of arc controlled seam tracking system. *IIW Doc.* XII-936-86.

5. Nakajima, J., *et al.* 1986. Arc sensor for welding line tracking applied to welding robot. *IIW Doc.* XII-954-86.

6. Lin, M. L., *et al.* 1985. Influence of arc pressure on weld pool geometry. *Welding Journal* 64(6): 163-s to 169-s.

7. Nishiguchi, K., *et al.* 1986. A nonlinear model of molten pool in arc welding. *Journal of the Japan Welding Society*, 4 (4): 19–23, (in Japanese).

8. Cook, G. E., *et al.* 1982. Analyzing arc welding signals with a microcomputer. *Conf. Rec. IEEE Industry Applications Soc. 1982 Annual Meeting*, pp. 1282–1288.

9. Hur, J.-W., *et al.* 1990. A study on seam tracking with an arc signal in GMA welding with mixed gas. *Journal of the Korean Welding Society* 8(1):23–30.

10. Spiegel, M. R. 1985. *Mathematical handbook*. McGraw Hill Book Co., New York, N.Y., pp. 108.

11. Crichton, A. B., *et al.* 1978. *Welding Handbook* Vol. 2, 7th edition, American Welding Society, Miami, Fla. pp. 114–152.