A Laser Welding Nozzle for Beam Delivery Optics Protection

Aerodynamically designed window proves effective in deflecting particles away from the laser optics

BY D. R. SUTLIFF, T. D. MCCAY, M. H. MCCAY AND C. M. SHARP

ABSTRACT. A laser welding nozzle with an aerodynamic window was developed to protect the beam delivery optics by preventing ejecta particles from depositing on the optics. The area and magnitude of the cross-flow through the window was optimized in a cold-flow experiment with the nozzle removed from the laser. A series of welds was conducted with the cross-flow nozzle and the existing baseline laser beam welding nozzle. The degradation of power to the workpiece, particle distribution on the reflective optics, and weld porosity and penetration were noted.

The aerodynamic window substantially reduced the amount of particle buildup on the reflective optics. As a result, loss in the power delivered to the workpiece was reduced. Examination of the weld structure ensured that there was no interference with the quality of the weld due to the cross-flow.

Introduction

Lasers used for welding contain a series of reflective and transmissive optics. Contamination on these optics results in aberrations in the laser beam and subsequent degradation in the properties of the weld. The loss in power delivered to the workpiece necessitates downtime in order to restore the efficiency by cleaning the mirrors. Particle buildup may even result in physical damage such as fracture, necessitating replacement with its attendant downtime and material costs. Welding of aluminum alloys has been particularly damaging to the optics due to the presence of volatile alloying elements, such as magnesium and manganese (Refs. 1, 2). A portion of the vaporized gasses and ejecta is shot up through the laser nozzle and is deposited on the laser beam delivery optics and mirrors.

The nozzle currently in use at the UTSI CLA for laser beam welding is cone-shaped, with two gas jet inputs, a co-axial, and a side-gas jet flow. The existing baseline nozzle is shown in Fig. 1. The coaxial gas jet flow shields the weld area with a nonoxidizing gas, typically argon or helium. A typical flow rate for the coaxial gas jet is 5.7 L/min (2.7 ft^3/min). The side gas jet flow is used for plasma control and settings vary depending on the material being welded.

Aerodynamic windows have been used with lasers since the introduction of the first high-energy laser, the Gas Dynamic Laser (GDL). An aerodynamic window consists of a cross-flow of pressurized gas nearly perpendicular to the beam propagation. This cross-flow is usually supersonic, but a few are subsonic (Ref. 3). The purpose of existing aerodynamic windows is to maintain the gas and the desired pressure within the laser cavity (while still optically transmitting the beam) by providing a pressure barrier between ambient and the laser beam cavity. Although some high-power laser systems protect the optics with a transverse air curtain, or air knife, a review of the literature did not find any examples of an aerodynamic window used in the nozzle area to protect the laser optics. The purpose of this study is to develop such an aerodynamic window.

KEY WORDS

Laser Beam Welding
Laser Welding Nozzle
Optics Protection
Aerodynamic Window
Cross-Flow Nozzle
Reflective Optics
Transmission Optics
Power Delivery
Weld Penetration
Optics Cleaning

Conceptual Design

The first order equations of motion were applied to calculate the dimensions of the aerodynamic window and the amount of required cross-flow. The equations of motion are:

$$F = \tfrac{1}{2}\rho V^2 C_d A; \qquad (1)$$

$$F = m(-a) \qquad (2)$$

Where F = drag force on particle; C_d = drag coefficient; A = particle frontal area; p = density of air; V = relative velocity between cross-flow and particle; m = mass of particle; a = deceleration of particle due to drag.

These equations were solved with a forward time marching solution to estimate the trajectory of a particle entering the cross-flow. From videotape recordings of previous weld experiments, the ejected particles were assumed to be spherical, 0.1 mm (0.004 in.) in diameter with a velocity of 7 m/s (23 ft/s). The drag coefficient, C_d, was assumed to be that of a sphere in incompressible, inviscid flow. The nominal particle size and velocity were bracketed, and the equations solved for different cross-flow velocities. From Fig. 1 it was estimated that a particle would have to travel about 2 cm (0.79 in.) horizontally before traveling 3 cm (1.2 in.) vertically to prevent the particle from striking the mirror. This estimate, superimposed with the results of the numerical studies in Fig. 2, shows that a cross-flow of about 10 to 20 m/s (33 to 66 ft/s) would satisfy these criteria.

A nozzle was designed based on dimensional constraints from the existing laser focusing assembly. The nozzle is comprised of four sections to facilitate

---

D. R. SUTLIFF, T. D. McCAY, M. H. McCAY and C. M. SHARP are with the University of Tennessee Space Institute, Tullahoma, Tenn.

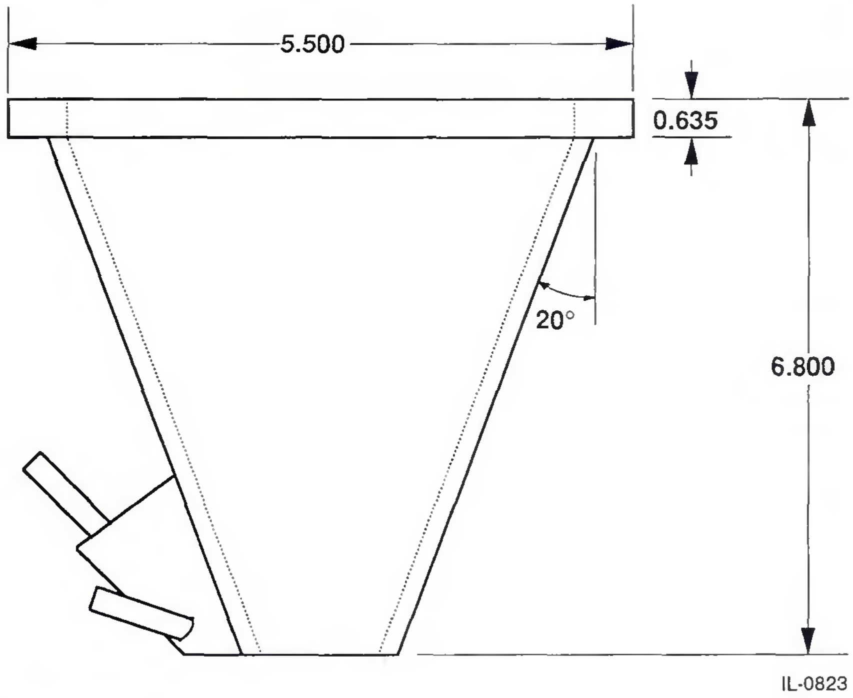

Dimensions in cm
Material: copper

Fig. 1 — Existing UTSI CLA baseline laser welding nozzle.

development changes and for ease of fabrication. The four sections, shown in Fig. 3, are the cross-flow inlet tunnel, cross-flow exhaust tunnel, cylindrical base, and conical tip. A photograph of the assembled nozzle is shown in Fig. 4. The inlet tunnel contains a 0.5-mm (0.02-in.) square wire screen mesh to straighten the cross-flow and minimize dead spots. Design of the cross-flow inlet as a separate piece allows for the insertion of shims to optimize the area/velocity parameters of the cross-flow.

Experimental Approach

Aluminum Alloy 5052 was chosen for the welding studies because the concentration of magnesium and manganese are thought to be the cause of ejecta-related problems during laser welding (Ref. 4). The laser used for this study was a Rofin-Sinar model RS 3000 RF-excited, fast axial flow industrial CO_2 laser. The laser power output can be continuously varied between 0.2 and 3.7 kW. The manipulation of the workpiece was achieved with a five-axis CNC computer driven Aerotech workstation. A schematic of the laser beam delivery system is shown in Fig. 5. This is a typical arrangement for high-power CO_2 laser beam reflective optic delivery systems. The reflective optics are a flat, molybdenum-coated copper mirror and a parabolic copper mirror, and the transmission optic is a Zn-Se window. The parabolic mirror, being in a direct line above the workpiece, is most often contaminated by ejecta particles, while the Zn-Se window being at the top of the nozzle assembly is most affected by the rising vaporized metal. (In a system with only transmission optics the Zn-Se windows are directly above the workpiece and can be severely damaged by particles and vapors.) The weld parameters are shown in Table 1. Cross-flow nozzle optimum operating parameters were selected based on bench-top experiments (Ref. 5). Square plates, 200 X 200 X 6 mm (8 X 8 X 0.24 in.) were sand blasted to a visibly smooth surface then welded bead on plate in a series of runs. The path of the weld was a square shape, with the perimeter decreasing in toward the center of the plate. The intention was to fill the surface of the plate with welds, decreasing the square path in toward the center of the plate. The power delivered to the workpiece by the laser was measured by a Scientech 39-0201 water-cooled calorimeter after each square length of weld.

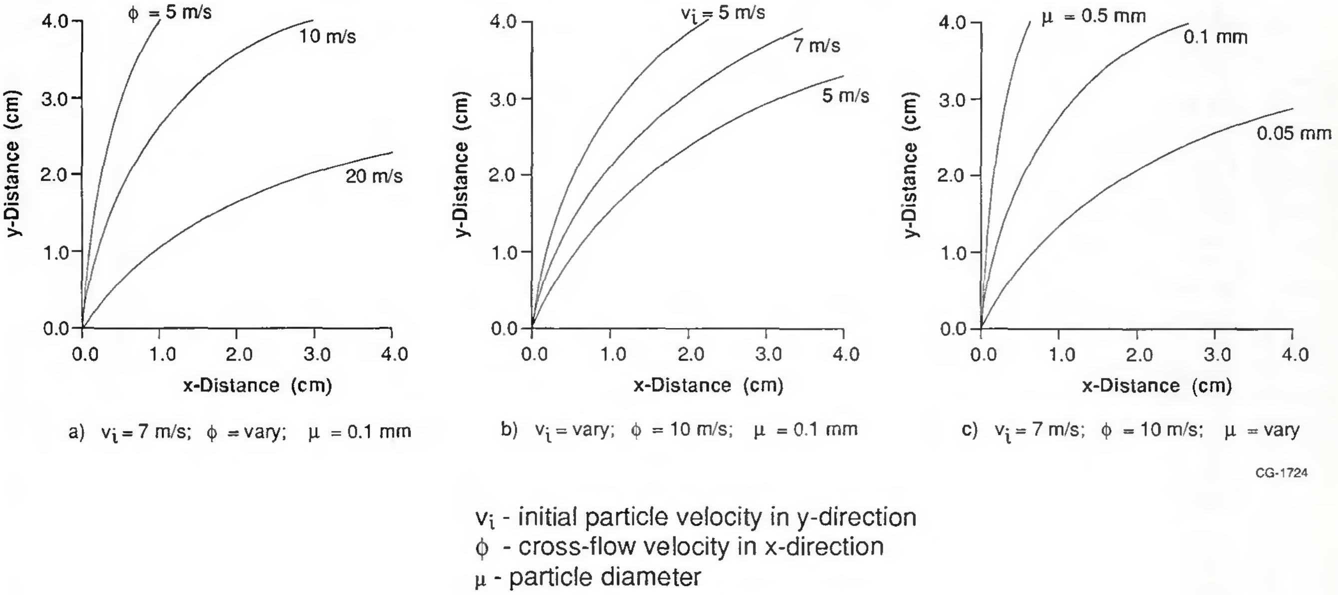

a) $v_i = 7$ m/s; ϕ = vary; $\mu = 0.1$ mm

b) v_i = vary; $\phi = 10$ m/s; $\mu = 0.1$ mm

c) $v_i = 7$ m/s; $\phi = 10$ m/s; μ = vary

Fig. 2 — Numerical estimate of particle trajectory in cross-flow.

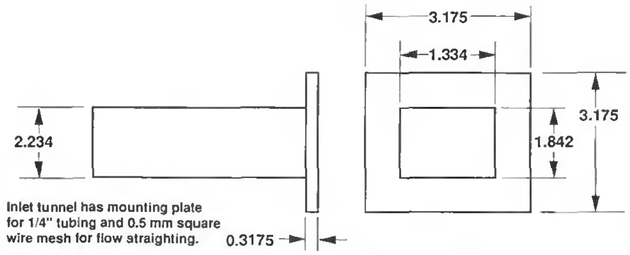

(a) Inlet and Exhaust Flow Tunnels

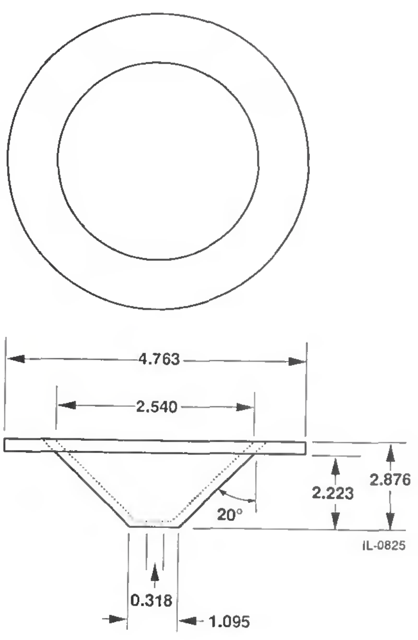

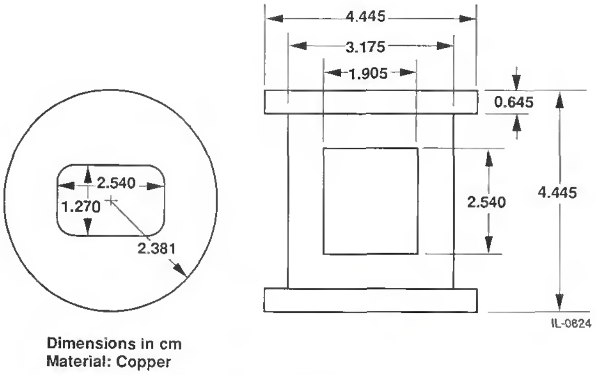

(b) Cylinder Base

(c) Conical Tip

Fig. 3 — Cross-flow nozzle components.

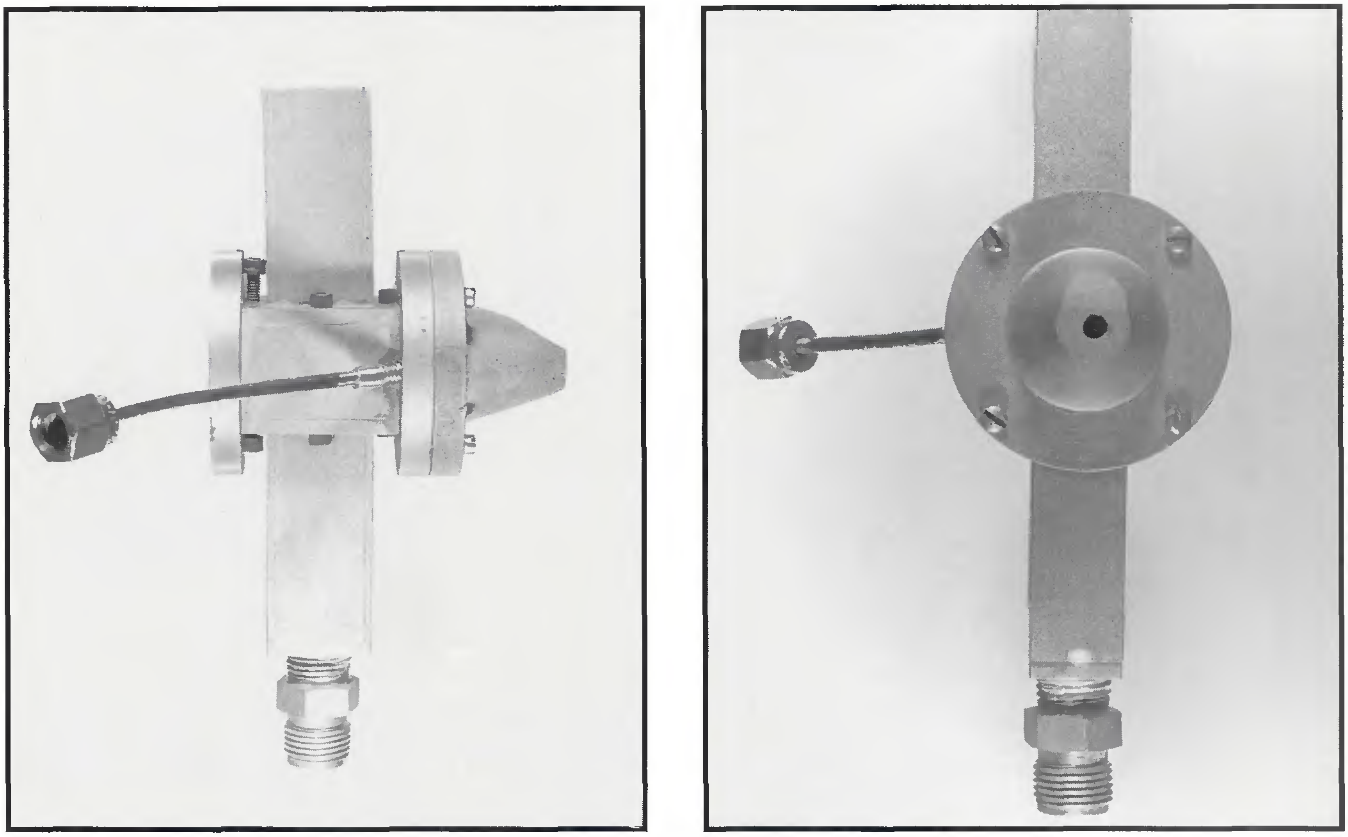

Fig. 4 — Assembled cross-flow nozzle.

Table 1 — Welding Parameters

Parameter	Setting
Laser power	3 kW
Laser mode	TEM_{01}
Laser temporal mode	CW
Co-Flow input	5.7 L/min
Weld speed	40 mm/s
Focus depth	1 or 2 mm

The baseline nozzle was used first. During the studies, while measuring the power output (after 2800 mm or 40% of the weld length), the Zn-Se window was found to be cracked. Upon examination, the cracked window was seen to be coated with a very fine layer of particle dust. This coating prevented the window from fully transmitting the laser beam, and the resulting absorption of energy by the window caused it to crack. Further studies with the baseline nozzle were terminated out of concern for destroying another Zn-Se window.

During the cross-flow nozzle studies, 7000 mm (23 ft) of weld were made with the cross-flow set to 208 L/min (98 ft^3/min). No problems were encountered.

After the welds were completed for a nozzle case, the parabolic mirror was removed. The particles deposited on the mirror were collected with clear adhesive tape, examined under 8X magnification, and measured. Particles deposited on the mirror tend to assume a flat oval shape and were measured as

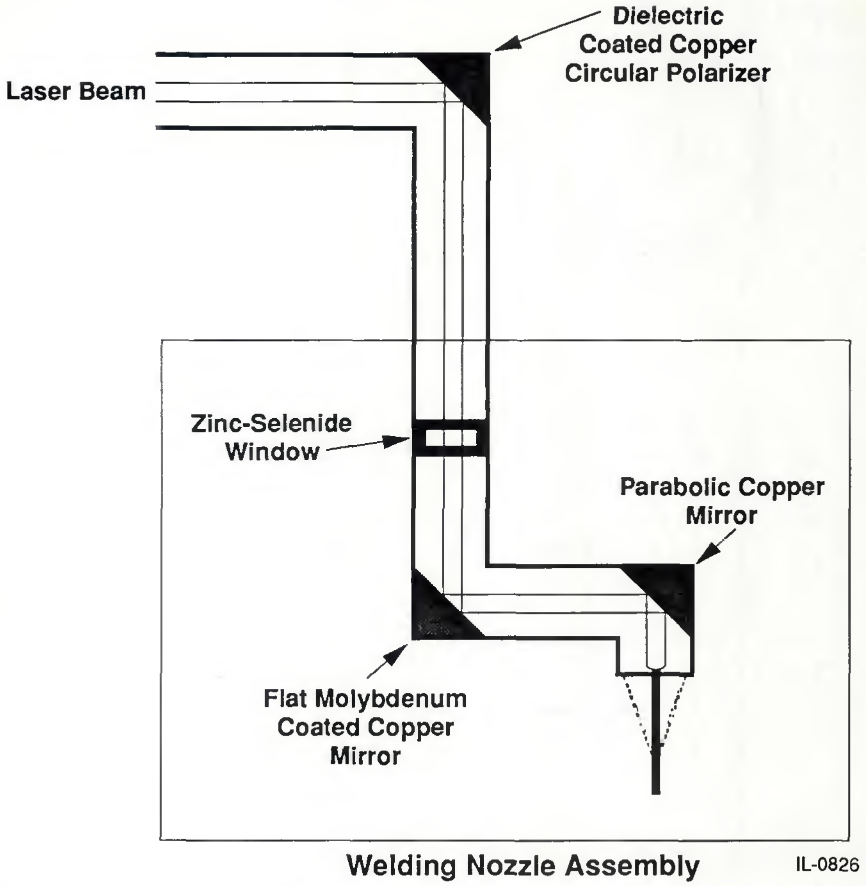

Fig. 5 — UTSI laser beam delivery optics.

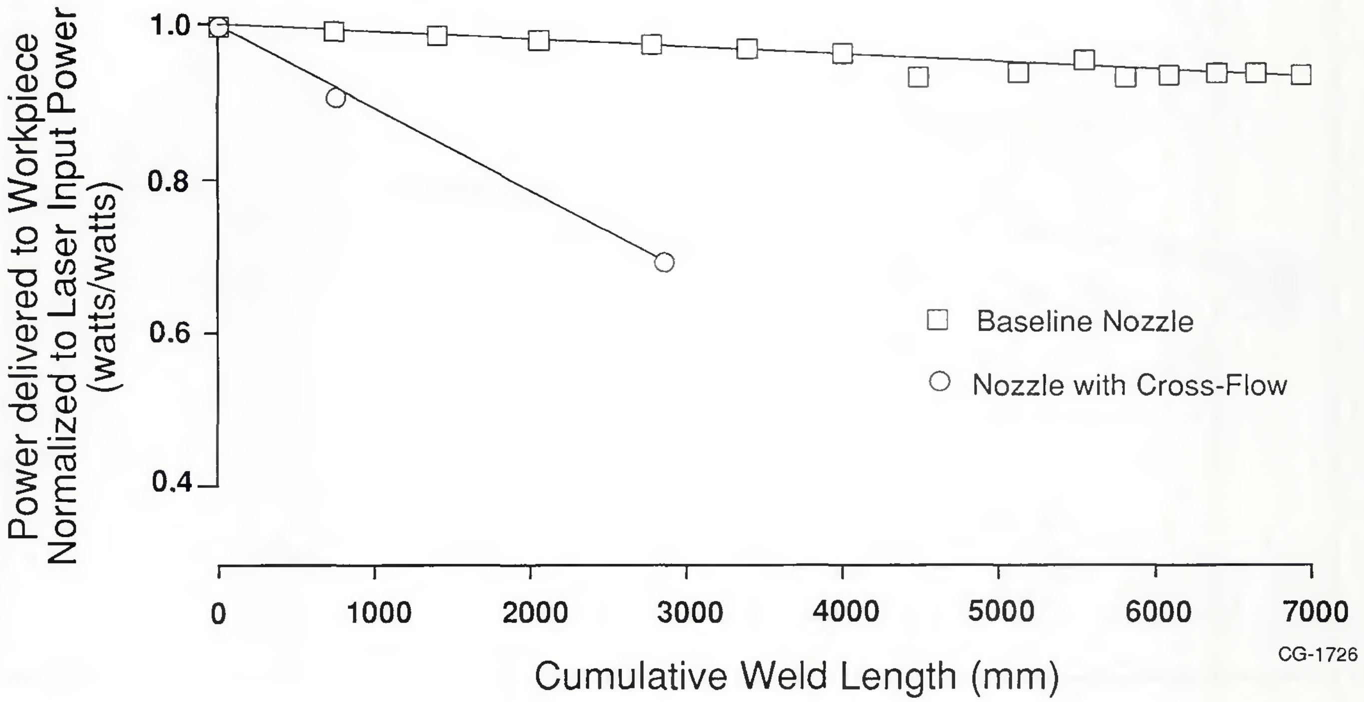

Fig. 6 — Efficiency of laser power delivered to workpiece as a function of cumulative weld length.

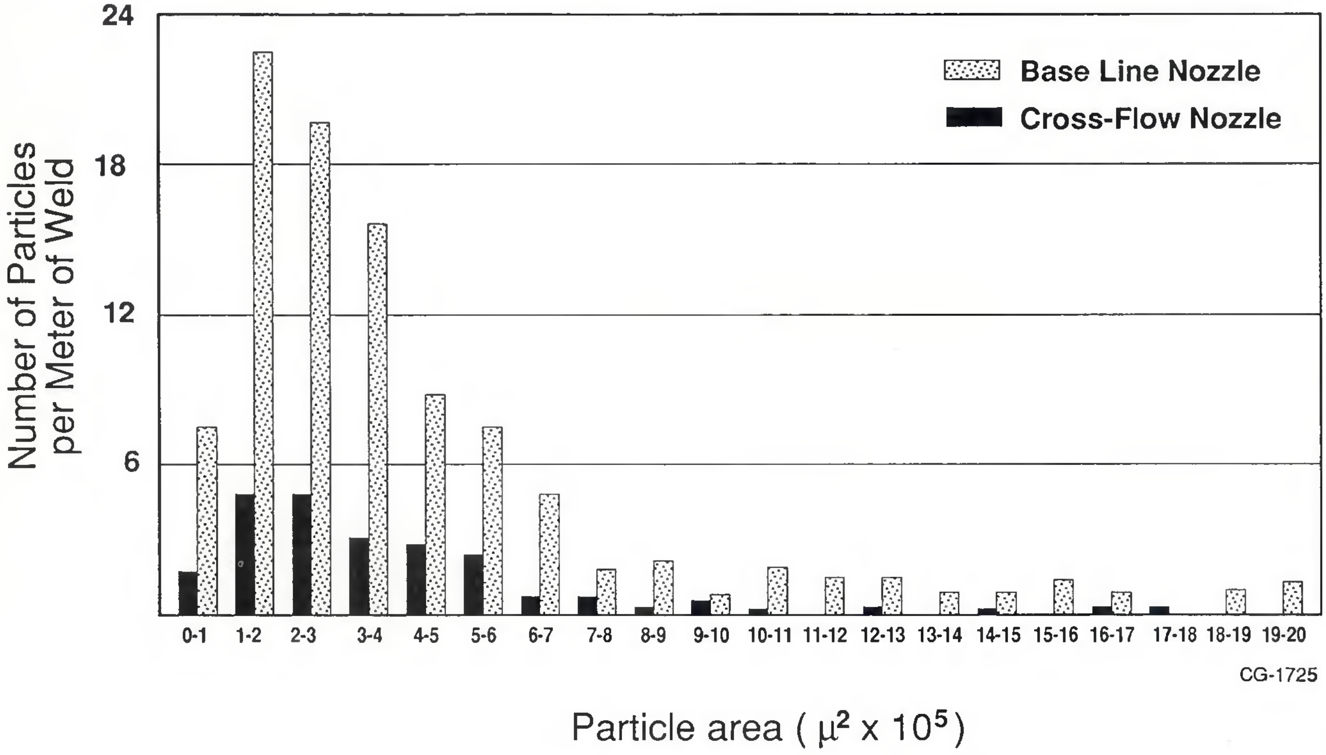

Fig. 7 — Area distribution of particles deposited on mirror per meter of weld.

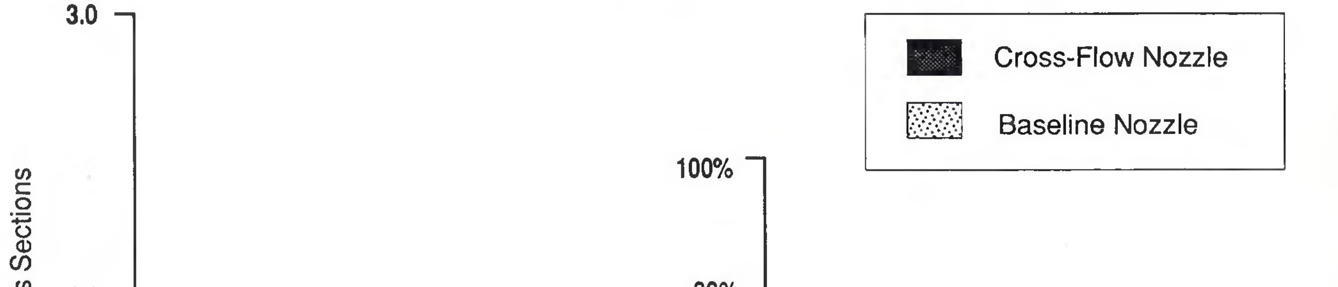

a) Porosity Area Distribution

b) Percentage of Cross Sections with a Given Percentage Porosity

Fig. 8 — Porosity of weld cross-sections.

such. The distribution of the number of particles having a given area was recorded. To account for the different weld lengths, the area distribution was normalized by the total weld length.

The welded plates were cross-sectioned, mounted and polished. The cross-sections were analyzed for porosity.

An experiment was conducted to determine if there were any cross-flow/coaxial-flow interactions. There was no measurable effect on the flow at the nozzle tip between cross-flow off or cross-flow on (208 L/min), with no coaxial flow.

Results

The measured power delivered to the workpiece was divided by the power input to the laser to get an efficiency. This ratio was then normalized by the prewelding delivery efficiency. The normalized efficiency vs. the weld length is shown in Fig. 6. After equal lengths of welds (2800 mm/9.2 ft) the normalized efficiency of the baseline nozzle was 71.0% compared to 96.4% for the cross-flow nozzle, a 36% improvement. Extrapolating the cross-flow nozzle data to the 71.0% efficiency would give a weld length of 17,800 mm (58.4 ft), a factor of 6.4 weld length improvement over the baseline nozzle.

The results of the particle distribution analysis is shown in Fig. 7. The cross-flow nozzle removed approximately 80% of the smaller particles (less than 0.2 mm^2) and all of the larger particles (larger than 0.2 mm^2) when compared to the baseline nozzle.

Analysis of the weld character also shows differences between the two nozzles. The baseline nozzle started with a deep penetration weld, then destabilized to a conduction limited weld. The overall deep penetration to conduction-limited weld ratio was 53%. It is felt that the destabilization of the weld was due to the instabilities in the beam caused by the optics degradation.

Inspection of the surface cross-flow nozzle welds showed 95% were deep penetration. The area of the porosity in the cross-section of the weld is shown in Fig. 8. The cross-flow nozzle weld cross-sections tended to have several very small porosities (*e.g.*, 4 to 6 on the order $10^3\mu^2$). The average porosity for the cross-flow nozzle was 2.0%. The baseline nozzle tended to have a single, large porosity (on the order of $10^5\mu^5$), with an average porosity area of 17%. The cause of the difference in porosity is unknown.

Conclusions

The cross-flow nozzle is effective in protecting the reflective and transmission optics in the welding nozzle assembly. The Zn-Se optic remained intact throughout the cross-flow nozzle experiments for 7000 mm of weld length, while it was destroyed after 2800 mm of weld during the baseline nozzle experiments. Approximately 80% less ejecta particles were deposited on the parabolic mirror compared to the baseline nozzle for equivalent weld lengths. Based on the results of this study, the advantages to welding of the cross-flow nozzle are:

1) 36% reduction in power delivery degradation.

2) 80% more deep penetration weld to total weld length ratio.

3) Six times increase in weld length between reflective optics cleaning.

4) 88% less porosity by area in the weld.

5) No measurable effect on flow at the nozzle tip.

References

1. Mazumder, J. 1982. Laser welding: state-of-the-art review. *Journal of Metals*, July, pp. 16–24.

2. McCay, M. H., McCay, T. D., Sedghinasab, A., and Keefer, D. R. 1989. Correlation of plasma characteristics with weldment properties for laser welded aluminum alloys. *Laser Materials Processing III*, The Metallurgical Society, pp. 107–123.

3. Avidor, J. M. 1979. Improved free-vortex, subsonic aerodynamic window. *AIAA Journal*, November.

4. Marsico, T. A. 1988. Mass transfer studies of aluminum alloys 5083 and 7039. Pennsylvania State University Graduate School, M.S. thesis.

5. Sutliff, D. R. 1989. Design of a laser welding nozzle incorporating an aerodynamic window for laser beam delivery optics protection. Master of Science thesis, University of Tennessee Space Institute, Tullahoma, Tenn.