The Effects of Water Backing on SA106 Gr. B Pipe Welds

In tests simulating field conditions, welds on water-backed pipe satisfied the requirements of the appropriate codes and specifications

BY R. K. BEZZANT AND L. B. ENGEL

ABSTRACT. In nuclear power plants, welding often must be performed on piping systems that contain water. This occurs when the system cannot be isolated due to the piping configuration, plant operating requirements or the failure of a component in the system. Water-backed welds are routinely made on austenitic stainless steels and are often preferred to prevent intergranular stress corrosion cracking (IGSCC). However, welding on mild steel piping with water backing presents significant concerns as to the integrity and serviceability of the welds. This paper discusses the results of testing that was performed on mild steel pipe to determine the fitness-for-service of water-backed shielded metal arc (SMA) weldments.

A variety of water-backed welds in butt joints and fillet welds of different joint configurations and welding sequences were made on 8-in. (203-mm) diameter, Schedule 80, SA106 Gr. B pipe with the shielded metal arc welding process using E7018 electrodes. The mechanical properties and microstructure of these welds were compared with identical welds made without water backing. Mechanical testing was based upon the requirements of Section IX of the ASME *Boiler and Pressure Vessel Code*. Consideration was also given to the requirements of AWS D3.6 for Type A "dry welds."

All weldments passed the required testing of ASME Section IX and the additional impact testing of AWS D3.6. The test data indicated that the weldments made with water backing exhibited no significant difference in tensile properties when compared to welds made without water backing. Both types of welds exhibited no significant difference in tensile properties when compared to the nonwelded pipe, except for a minor loss in ductility. Although the HAZ impact strength was lower in the water-backed welds when compared to welds made without water, the lowest values still are more than twice the required limit in AWS D3.6.

As expected, significantly more martensite was found in the HAZ and weld metal of the water-backed welds resulting in the increased hardness in these areas. Some individual hardness values found in the martensitic HAZ of some welds are slightly above the limit of AWS D3.6. Specific welding techniques were investigated to temper the martensite in the HAZ and weld metal. The use of these techniques provided marked improvement in the HAZ and weld metal hardness.

Water-backed SMA welds made on SA106 Gr. B pipe can meet the mechanical testing requirements of ASME Section IX and the additional requirements of AWS D3.6. If the proper welding sequence is used on the water-backed SMA weldments, marked improvement in the HAZ and weld metal hardness can be achieved. SMA weldments made on SA106 Gr. B pipe with water backing should perform satisfactorily in service as permanent weldments.

R. K. BEZZANT is a Senior Materials and Special Processes Engineer, Northern States Power Co., Minneapolis, Minn. L. B. ENGEL is a Consultant, Engel Metallurgical, St. Cloud, Minn.

KEY WORDS

Pipe Welding
Water-Filled Pipe
Weld Water Backing
Nuclear Piping
Mild Steel Pipe
Fitness for Service
SMAW/E7018 Electrode
SA106 Gr. B Pipe
Stringer Bead Welding
Temper Bead Technique

Introduction

As nuclear power plants age, there is an increasing need to make repairs or modifications to piping systems that contain water. This often occurs when the system cannot be isolated due to the piping configuration, plant operating conditions, or the failure of a component in the system. Welding of water-filled piping does not present a problem for the austenitic stainless steels, and is often specified to mitigate intergranular stress corrosion cracking (IGSCC). However, welding on water-filled mild steel piping can create hard, crack-sensitive areas in the heat-affected zone (HAZ) and weld metal.

During the planning phase of a repair requiring welding on water-filled SA106 Gr. B pipe (Ref. 1), concern was ex-

Table 1 — Joint Geometries

Weld No.	Weld Type	Water Backing
1	Groove weld with backing	Yes
2	Groove weld with backing	No
3	Fillet weld—3 pass	Yes
4	Fillet weld—3 pass	No
5	Fillet weld—temper bead technique	Yes
6	Fillet weld—temper bead technique	No
7	Branch connection	Yes
8	Branch connection—with temper layer	Yes
9	Branch connection	No

pressed as to the fitness-for-service of the water-backed welds. A literature review produced no relevant information with regard to this base metal and welding condition. The proprietary water-backed welding procedures previously used were complicated and difficult to apply. These procedures required precise bead placement and strict heat input controls, which could not be performed by the average welder. The development of an easier-to-apply welding procedure was required.

To determine the fitness for service of the water-backed welds that were to be made, welding procedure qualification would be performed to ASME Section IX of the *Boiler and Pressure Vessel Code* (Ref. 2), with additional testing specified by AWS D3.6, *Specification for Underwater Welding* (Ref. 3). The testing conditions were to be representative of conditions seen in the field.

The requirements of AWS D3.6 were chosen because they provide fabrication and quality assurance standards for underwater welding. Although the welding to be performed did not fall within the scope of AWS D3.6, many of the factors affecting the weld quality and the serviceability of a water-backed weld are addressed in this code. Weld metal/HAZ toughness and ductility were considered to be of prime importance. Therefore, the Charpy impact test requirements and weld metal/HAZ hardness limits required by this code were used as acceptance criteria.

Using this information as a base, a welding procedure qualification plan was developed for the welding of SA106 Gr. B pipe filled with ambient temperature water to determine if:

1) Welds could be made that meet the mechanical testing requirements of ASME Section IX.

2) The impact toughness of the HAZ and weld could be maintained above the 15 ft-lb (20 J) limit of AWS D3.6 when tested at 0°F (–17.8°C).

3) The HAZ and weld metal hardness could be maintained below the 33 HRC limit of AWS D3.6.

4) Simplified welding techniques, easily applied by the average welder, could be used. These welding procedures would eliminate the heat input controls and would not require difficult weld bead placement techniques.

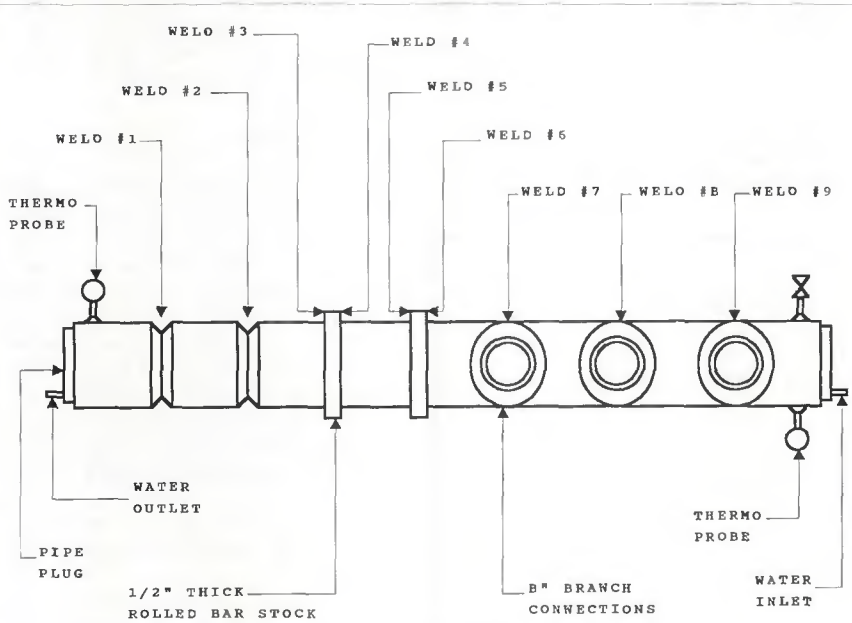

Fig. 1 — Test assembly for welding procedure qualification.

Table 2 — Pipe and Weld Metal Compositions

Pipe Chemical Analysis

Element	Pipe
C	0.28%
Mn	0.85%
P	0.014%
S	0.011%
Si	0.31%
Cr	0.08%
Ni	0.04%
Mo	0.04%
Cu	0.11%
V	<0.01%
Fe	Remainder

Weld Metal Chemical Analysis

Element	ER70S-2	3/32-in. E7018	1/8-in. E7018
C	0.055%	0.06%	0.06%
Mn	1.13%	1.28%	1.15%
P	0.009%	0.017%	0.018%
S	0.008%	0.014%	0.009%
Si	0.46%	0.35%	0.23%
Cr	0.02%	0.04%	0.05%
Ni	0.05%	0.04%	0.05%
Mo	<0.01%	0.01%	0.01%
Cu	0.10%	0.02%	0.02%
V	<0.01%	0.01%	0.01%
Fe	Remainder	Remainder	Remainder

Test Assembly Setup and Procedure

To determine the effect of water backing on joint configurations that are typically encountered, nine separate weldments were made using three different joint configurations. To ascertain the effect of water backing on the various configurations, identical welds were made with and without water backing. Table 1 lists the joint geometries used and whether water backing was present.

All welds were performed on 8-in. (203-mm) diameter, Schedule 80 pipe (nominal 0.5-in./12.7-mm wall thickness). The pipe conformed to the requirements of SA-106 Gr. B. The chemical analysis of the pipe is shown in Table 2.

All SMA welding was performed using E7018 electrodes. All SMAW electrodes were taken from new, unopened hermetically sealed cans. After opening the electrode cans, the E7018 electrodes were stored in portable ovens at 250° to 300°F (121°–149°C). The electrodes were removed from the portable ovens just prior to welding. All GTA welding was performed using ER70S-2 filler metal (Ref. 5). The chemical analyses of the weld metals are shown in Table 2.

Figure 1 illustrates the test assembly used for welding procedure qualification. Welds 1, 3, 5, 7 and 8 were made with the pipe filled with water. The temperature of the water was maintained between 80° and 90°F (26.7° and 32.2°C). A water flow rate of 8 to 9 gal/min (32 L/min) was maintained during welding. Welds 2, 4, 6 and 9 were made without water backing and were used for control and comparison purposes.

Groove Welds — Welds 1 and 2

Two identical single-V-groove welds were made in the 5G position — Table 3. The root and second pass for each weld were made with the gas tungsten arc welding (GTAW) process prior to filling the pipe with water. This provided the backing for the shielded metal arc (SMA) weld. The SMA portion of Weld 1 was completed with water backing and the SMA portion of Weld 2 was completed without water backing.

Three-Pass Fillet Welds — Welds 3 and 4

A piece of mild steel bar stock was rolled to the outside diameter (OD) of the pipe and tack welded in place. A three-pass SMA fillet weld was made on each side of the bar in the 5F position — Table 4. Weld 3 was made with water backing and Weld 4 was made without water backing.

Five-Pass Fillet Welds, Temper Bead Technique — Welds 5 and 6

As was done for Welds 3 and 4, a piece of rolled mild steel bar stock was tack welded to the pipe. A five-pass SMA fillet weld was made on each side of the bar in the 5F position using a temper bead technique — Table 5. The temper bead technique consisted of three passes of 3/32-in. (2.4-mm) diameter electrode deposited on the pipe followed by two passes of 1/8-in. (3.2-mm) diameter electrode deposited on top of the initial weld. A distance of 1/16 in. (1.6 mm) was maintained between the weld toe of pass 5 and the weld toe of pass 3. This was done to insure that the HAZ of pass 5 did not extend beyond the HAZ of pass 3. Weld test 5 was made with water backing and weld test 6 was made without water backing.

Branch Connections — Welds 7, 8 and 9

Three branch connection welds were made using Weldolet fittings. The fittings are typical of the type used in hot

Table 3 — Welds 1 and 2

Welding Parameters

	Weld Pass	Weld Process	Electrode Diam. (in)	Heat Input (kJ/in.)	Interpass Temp. (F)	Water Backing
Weld 1	1	GTAW	n/a		86	no
	2	GTAW	n/a		129	no
	3	SMAW	3/32	54.15	85	yes
	4	SMAW	1/8	72.66	85	yes
	5	SMAW	1/8	57.41	89	yes
	6	SMAW	1/8	59.39	102	yes
Weld 2	1	GTAW	n/a		89	no
	2	GTAW	n/a		130	no
	3	SMAW	3/32	42.51	229	no
	4	SMAW	1/8	59.08	142	no
	5	SMAW	1/8	49.61	309	no
	6	SMAW	1/8	49.75	293	no

Weld Pass Sequence and Joint Configuration

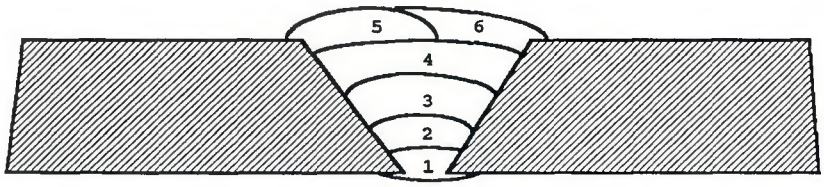

Included Angle = 75 deg.
Root Opening = 1/8 in.
Root Face = 0 in.

Table 4 — Welds 3 and 4

Welding Parameters

	Weld Pass	Electrode Diam. (in)	Heat Input (kJ/in.)	Interpass Temp. (F)	Water Backing
Test 3	1	3/32	36.90	81	yes
	2	3/32	33.18	140	yes
	3	1/8	43.14	125	yes
Test 4	1	3/32	45.50	96	no
	2	3/32	32.78	208	no
	3	1/8	35.11	256	no

Weld Pass Sequence and Joint Configuration

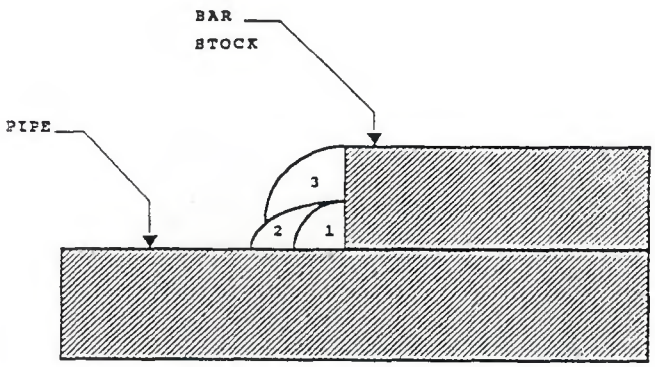

tap welds. The fittings were made of ASTM A105 material (Ref. 1) and the weld was performed in the 5G position. Weld 7 was made with water backing using the GTAW process for the root and second passes and the SMAW process for subsequent passes.

Weld 8 had an SMAW temper layer applied to the water-filled pipe prior to welding the branch connection — Fig. 2. The temper layer consisted of one layer of weld metal deposited with 3/32-in.-diameter electrode. A second temper layer was then deposited using 1/8-in.-diameter electrode. A distance of 1/16 in. was maintained between the edge of the second layer and the edge of the first layer. This was done to insure that the HAZ of the second layer did not extend beyond the HAZ of the first layer. The branch connection was then welded to the temper layer of the water-filled pipe using the GTAW process for the root and second passes and the SMAW process for subsequent passes.

Weld 9 consisted of a branch connection welded to the pipe without water backing. The GTAW process was used for the root and second passes and the SMAW process was used for subsequent passes.

Table 5 — Welds 5 and 6

Welding Parameters

	Weld Pass	Electrode Diam. (in.)	Heat Input (kJ/in.)	Interpass Temp. (F)	Water Backing
Test 5	1	3/32	40.95	87	yes
	2	3/32	37.24	178	yes
	3	3/32	32.14	207	yes
	4	1/8	66.24	201	yes
	5	1/8	55.50	206	yes
Test 6	1	3/32	52.52	161	no
	2	3/32	37.81	289	no
	3	3/32	32.22	314	no
	4	1/8	59.04	211	no
	5	1/8	45.78	307	no

Weld Pass Sequence and Joint Configuration

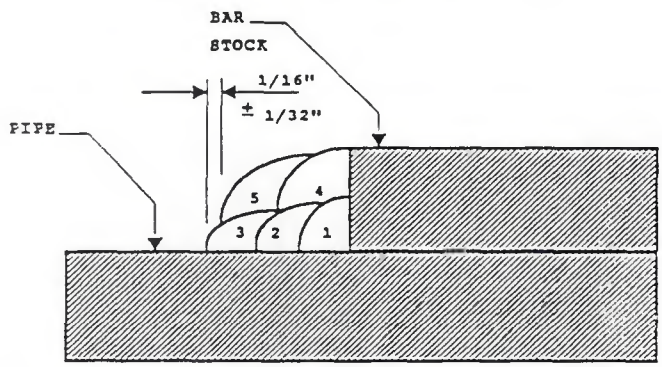

Mechanical and Metallurgical Tests

Listed below is a summary of the mechanical, nondestructive, and metallurgical tests performed on the weldments that indicates the welds to which they were applied.

ASME Section IX — Welding and Brazing Qualification

Radiography — Although not required by ASME Section IX for welding procedure qualification, Welds 1 and 2 were radiographed per the requirements of ASME Section IX to determine the soundness of the weld metal.

Reduced Section Tensile Test — Transverse reduced section tensile tests were performed on Welds 1 and 2 as required by ASME Section IX.

Guided Bend Tests — Transverse root and face bend tests were performed on Welds 1 and 2 as required by ASME Section IX.

Fillet Weld Tests — Fillet weld tests were performed on Welds 3, 4, 5 and 6 as required by ASME Section IX. The specimens were sectioned, polished and etched with 2% nital and examined with the aid of a stereo microscope. The fillet weld size and contour requirements of ASME Section IX were not considered.

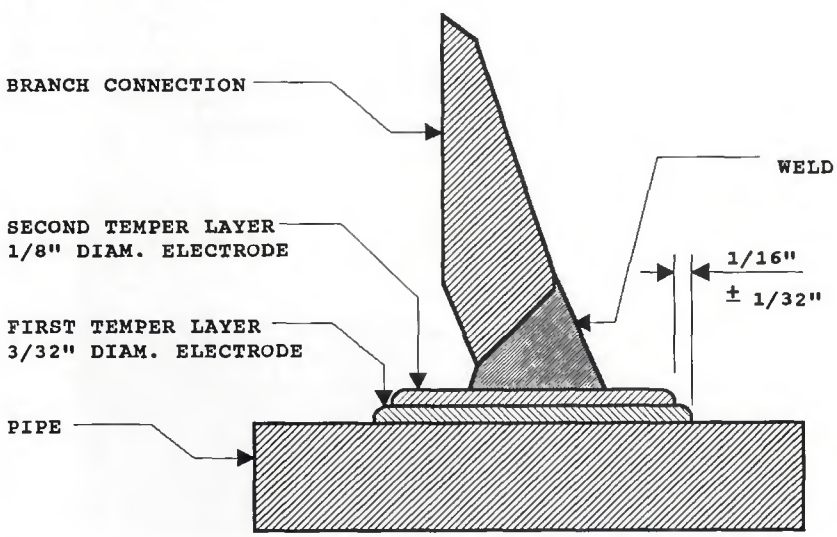

Fig. 2 — Branch connection temper layer technique in Weld 8.

AWS D3.6 Specification for Underwater Welding

Charpy Impact Test — Standard subsize Type A Charpy impact specimens were cut from Welds 1 and 2. These specimens were prepared and tested as required by AWS D3.6. Testing was performed to ASTM A370 (Ref. 6) at 0°F (–17.8°C).

Other Testing Performed

Macro Examination — All welds had samples removed from the 0-, 90- and 180-deg locations. These samples were polished and etched with 2% nital. A visual examination was performed with the aid of a stereo microscope at magnifications from 1 to 7X. This examination was used to determine the soundness and quality of the welds.

Metallographic Examination — After

Table 6 — Tensile Test Results

Test Weld	Uts	0.2% Yield (psi)	Elongation (%)	RA (%)	Break Location
1	85,700	56,600	22	56	Base Metal
	85,500	53,500	22	56	Base Metal
2	83,100	58,100	16	45	Weld Metal
	82,100	57,300	21	66	Weld Metal
Unwelded Pipe	85,400	61,800	30	64	—
	85,000	58,400	30	62	—

Table 7 — Charpy Impact Results

Weld	Location	Energy Absorbed Foot-Pounds[a]	Lateral Expansion Mils[a]	Shear Fracture %[a]
1	Weld	87	64	96
	HAZ	49	35	66
2	Weld	94	67	86
	HAZ	84	54	84
AWS D3.6	WELD	15[b]	NR[c]	NR
	HAZ	15[b]	NR	NR

(a) Average values from 3 specimens per AWS D3.6. testing performed at 0°F.
(b) Minimum/Average.
(c) NR—No Requirement.

completion of the macro examination, all specimens were examined with a metallurgical microscope at magnifications of 35 to 500X. An evaluation of the grain structure and soundness of the base metal, HAZ and weld metal was performed.

Microhardness Test — All of the metallurgical samples were used for microhardness testing. Hardness readings were taken in the base metal across the HAZ and for a distance into the weld metal. An attempt was made to take representative microhardness readings based upon typical microstructures. The samples were lightly etched for guidance in placement of hardness impressions and then re-etched to facilitate the identification of interfaces between the metallurgical structures.

All microhardness tests were made using a 500-g load and a Knoop indenter. Testing was conducted in accordance with ASTM E384 (Ref. 7). The values were then converted to the Rockwell scale using ASTM E140 *Standard Hardness Conversion Tables for Metals* (Ref. 8). A comparison to the maximum hardness limits of AWS D3.6 was made.

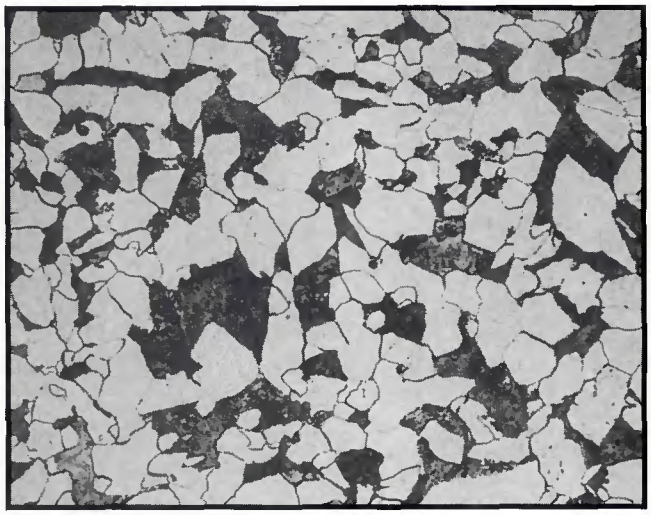

Fig. 3 — Typical base metal microstructure.

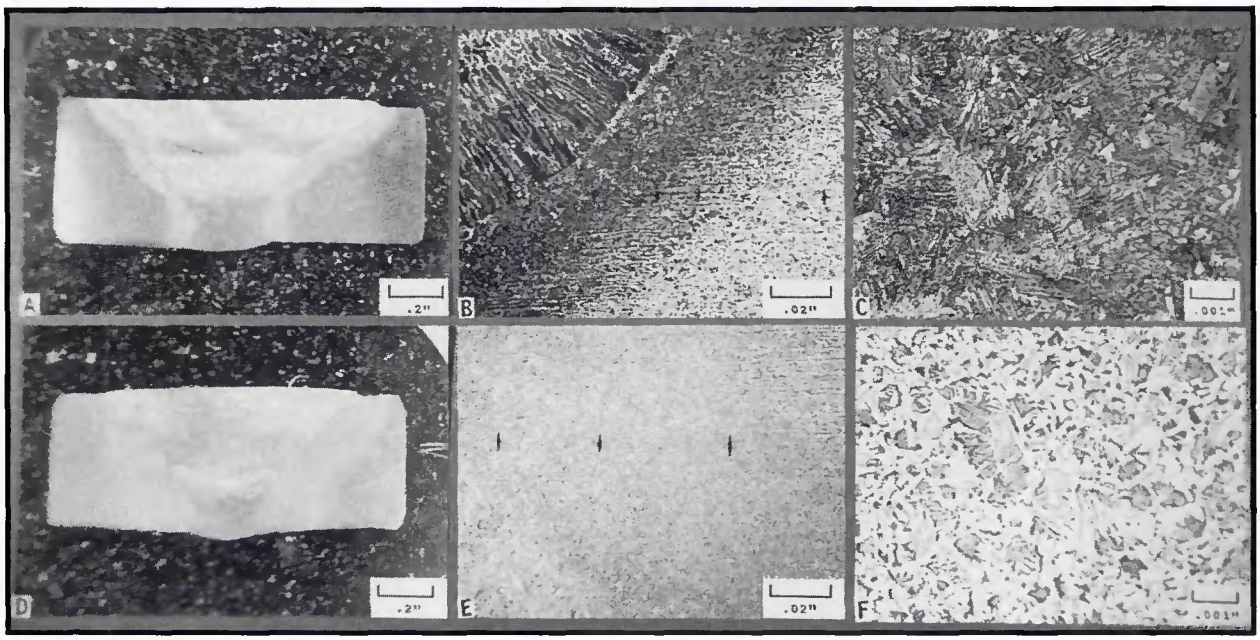

Fig. 4 — Groove welds.

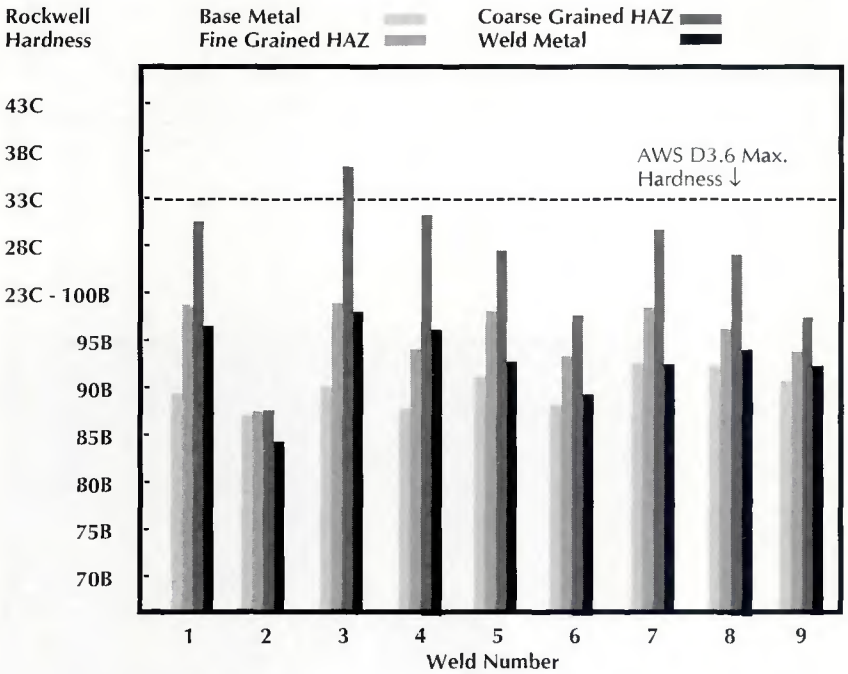

Fig. 5 — Microhardness testing results.

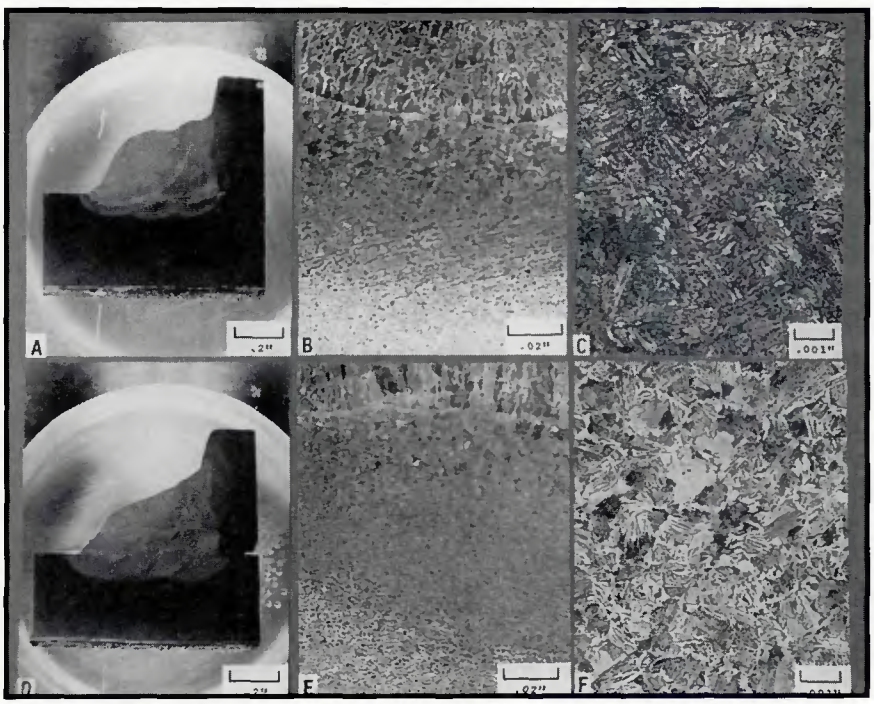

Fig. 6 — Three-pass fillet welds.

Results of Mechanical and Metallurgical Tests

Groove Welds

Radiography — A review of the radiographs of Welds 1 and 2 showed only minor porosity and small slag inclusions. Both welds met the acceptance criteria of the code.

Reduced Section Tensile Tests — Welds 1 and 2 each had two transverse reduced section tensile tests performed as required by ASME Section IX. Each specimen met the acceptance criteria of the code. Table 6 lists the results of these tests.

Guided Bend Tests — Welds 1 and 2 each had reduced section transverse root and face bend tests performed as required by ASME Section IX. After bending, the specimens showed no cracks or other defects and met the acceptance criteria of the code.

AWS D3.6 Charpy Impact Test — The Charpy specimens tested from Welds 1 and 2 had impact values well above the minimum 15 ft-lb requirement of AWS D3.6. Table 7 lists the average results of the Charpy impact testing.

Macro and Metallographic Examinations — Metallographic examination of the base metal exhibited a typical ferritic-pearlitic structure — Fig. 3. This was typical for all samples observed.

A macro examination of Weld 1 (waterbacked) showed no cracks or incomplete fusion, and only minor porosity was noted. The HAZ was narrow and very distinct — Fig. 4A. Metallographic examination showed a HAZ consisting of a fine-grained structure changing to a coarse-grained structure containing tempered martensite near the weld — Fig. 4B and C.

A macro examination of Weld 2 (no water backing) showed no cracks or incomplete fusion and only a minor slag inclusion near the root of the weld. A wider, less distinct HAZ was observed — Fig. 4D. The metallographic examination shows a HAZ with a fine-grained structure changing to a mixed structure consisting of ferrite, pearlite and tempered martensite near the weld — Fig. 4E and F.

Microhardness Test

As is shown in Fig. 5, water backing on Weld 1 significantly increased the hardness of the HAZ when compared to Weld 2 made without water backing. A maximum hardness reading of 33 HRC was noted at the 90-deg location in Weld 1. The maximum individual hardness readings at 0- and 180-deg locations were less than or equal to 28 HRC. This difference in hardness resulted from

the welder using a weave bead technique in the vertical section of the weld resulting in a heavier weld deposit. The subsequent weld passes could not sufficiently temper the HAZ. By using the stringer bead technique, as was done at the 0- and 180-deg locations, improved tempering of the HAZ occurs.

Fillet Weld Tests and Macro Examinations — Each fillet weld specimen showed complete root penetration and exhibited no cracking in the weld or HAZ. All specimens met the macro examination requirements of the ASME Section IX. Figure 6A and D shows a typical cross-section of the three-pass fillet welds with and without water backing, and Figure 7A and D shows a typical cross-section of the five-pass temper bead fillet welds with and without water backing.

Metallographic Examination — Metallographic examination shows a base metal with a typical ferritic-pearlitic structure. The HAZ of all samples shows a fine-grained region changing to a coarse-grained region of tempered martensite near the weld metal. Significantly more tempered martensite was present in the welds made with water backing (Welds 3 and 5). Typical microstructures are shown in Figs. 6 and 7.

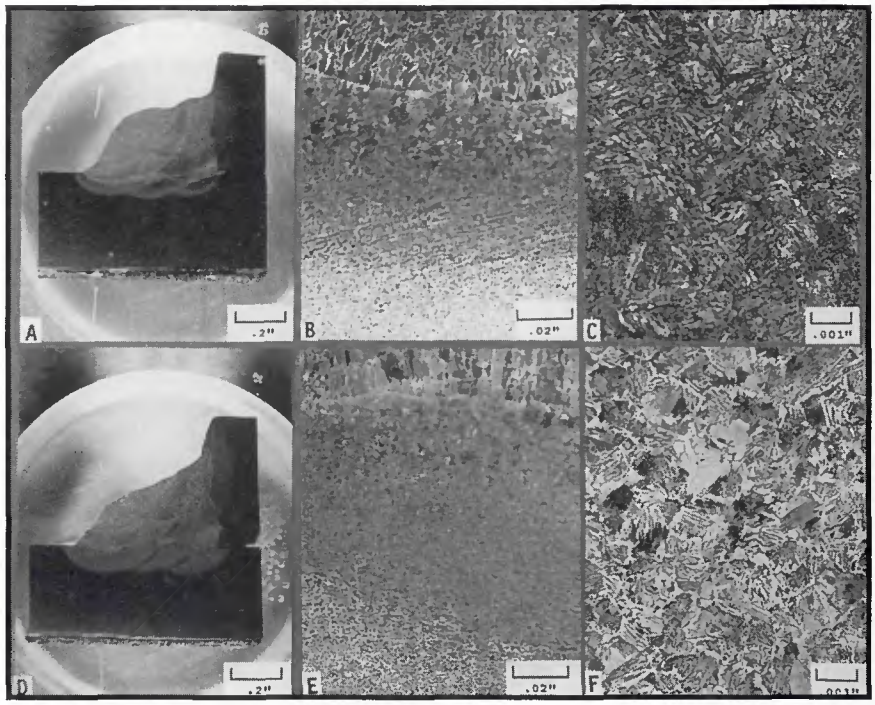

Fig. 7 — Five-pass temper bead fillet welds.

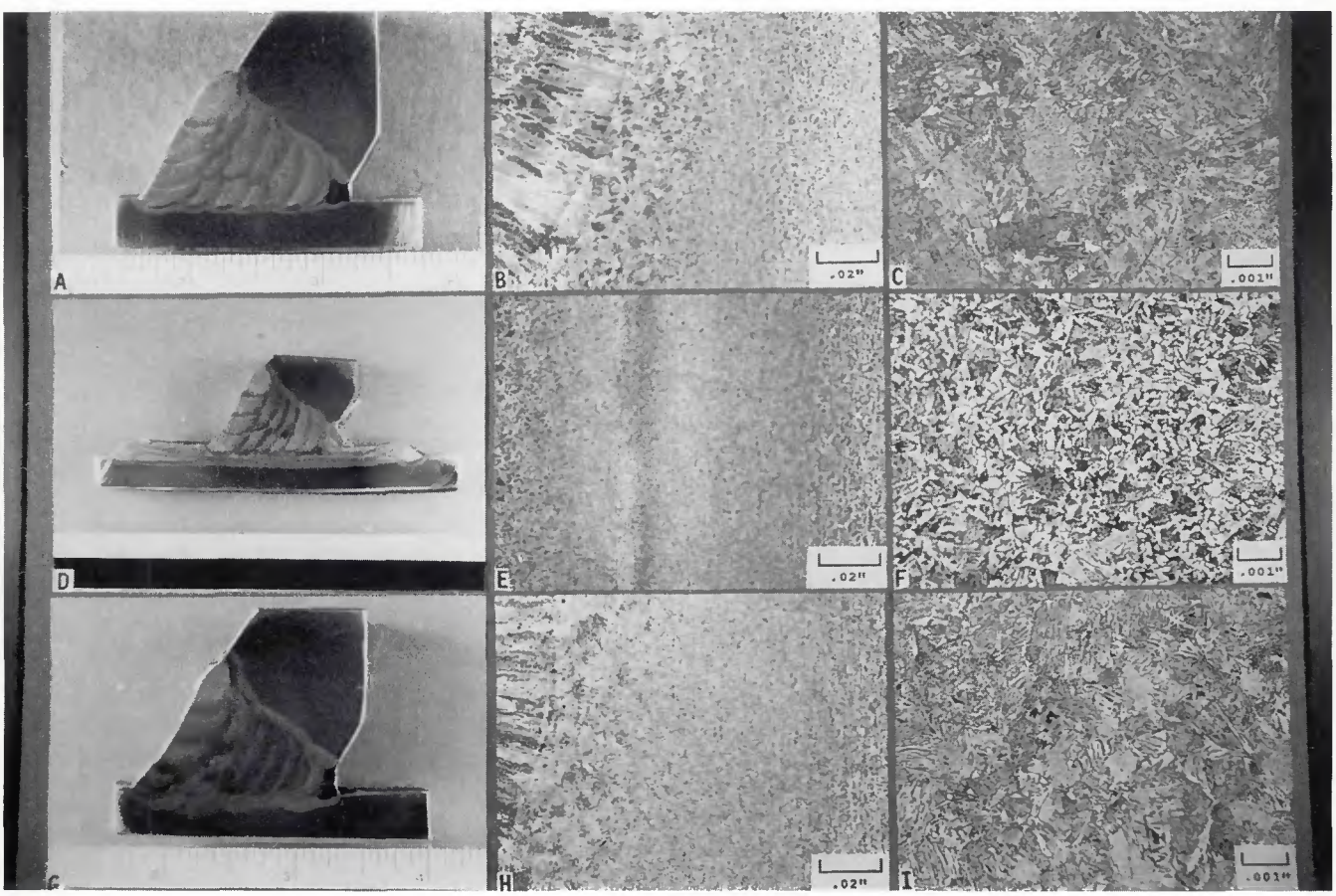

Fig. 8 — Branch connection welds.

Microhardness Test — As shown in Fig. 5, Weld 3, three-pass fillet weld with water backing, had an average hardness in the HAZ exceeding the 33 HRC limit of AWS D3.6. Weld 5, five-pass temper bead fillet weld with water backing, had an average hardness less than the AWS D3.6 maximum. The average hardness of Weld 5 was also less than a three-pass fillet weld made without water backing (Weld 4).

A maximum hardness of 37 HRC was noted in the tempered martensite of Weld 5. This maximum hardness was an individual reading at the 90-deg location. All other readings in the HAZ did not exceed 28 HRC. The high hardness reading at the 90-deg location resulted from a weave bead technique being used by the welder in the vertical section of the weld. Subsequent weld passes could not sufficiently temper the HAZ. If the stringer bead technique is used, as was done in the 0- and 180-deg locations, improved tempering of the HAZ occurs.

Branch Connection Test Results

Macro and Metallographic Examination

No cracking and only minor slag inclusions and porosity were noted in Welds 7, 8 and 9 — Fig. 8A, D and G. Metallographic examination of Weld 7, water backed, shows a fine-grained HAZ area with discontinuous V-shaped areas of tempered martensite — Fig. 8B and C.

Metallographic examination of Weld 8, water backed with a temper layer, shows a fine-grained HAZ for the temper bead area with discontinuous V-shaped areas of tempered martensite. The remainder of the weld consisted of a typical ferritic weld deposit — Fig. 8D and E.

Metallographic examination of Weld 9, no water backing, shows a fine-grained HAZ with discontinuous areas of a mixed structure consisting of ferrite, pearlite and tempered martensite. In comparison to Welds 7 and 8, the HAZ was much broader and less defined — Fig. 8G and H.

Microhardness Survey

As is shown in Fig. 5, the average hardness of the branch connections, Welds 7, 8 and 9, were less than the AWS D3.6 maximum. A maximum hardness of 33 HRC was noted in the HAZ of Weld 7. As was the case in Welds 1 and 5, the maximum hardness reading occurred at the 90-deg location. Hardness readings at the 0- and 180-deg locations were all less than 30 HRC. Again, this is indicative of a weave bead technique being used in the vertical section of the weld. Applying a temper layer to the pipe prior to welding, as was done in Weld 8, has the advantage of producing a greater refinement and softening of the HAZ.

Conclusions

The testing indicates that standard welding parameters and simplified welding techniques can produce water-backed welds on SA106 Gr. B pipe that meet the welding procedure qualification requirements of ASME Section IX. The ultimate tensile and yield strengths are comparable to welds made without water backing.

The tensile, bend and Charpy impact tests indicate the water-backed welds have acceptable levels of toughness and ductility.

As indicated by Fig. 5, water backing increased the hardness of the HAZ and weld metal. If the stringer bead technique is used, the HAZ of a groove weld made with water backing will be sufficiently tempered to produce a weld which should perform satisfactorily in service.

When making fillet welds, the temper bead technique must be used to achieve acceptable hardness levels in the HAZ. If the temper bead technique is used and the welding is limited to stringer beads, fillet welds can be made that should perform satisfactorily in service.

Branch connections can be welded to water-filled pipe and achieve acceptable hardness levels in the HAZ if the stringer bead technique is used. Although applying a temper layer is not entirely necessary, it does reduce the HAZ hardness to some extent. Branch connection welds made in this manner should perform satisfactorily in service.

References

1. American Society of Mechanical Engineers. *Boiler Pressure Vessel Code*, Section II, Part A, 1980 Edition through Winter 81 addenda.
2. American Society of Mechanical Engineers. *Boiler Pressure Vessel Code*, Section II, Part C, SFA 5.1, 1983 Edition through Winter 85 addenda and 1986 Edition with no addenda.
3. American Welding Society. *Specification for Underwater Welding*, ANSI/AWS D3.6-89.
4. American Society of Mechanical Engineers. *Boiler Pressure Vessel Code*, Section IX, 1986 Edition through Winter 87 addenda.
5. American Society of Mechanical Engineers. *Boiler Pressure Vessel Code*, Section II, Part C, SFA 5.18, 1980 Edition through Summer 82 Addenda.
6. American Society for Testing and Materials. *Standard Test Methods and Definitions for Mechanical Testing of Steel Products*, A370-88a.
7. American Society for Testing and Materials. *Standard Test Method for Microhardness of Materials*, E384-84.
8. American Society for Testing and Materials. *Standard Hardness Conversion Tables for Metals*, E140-88.

8th Annual North American Research Conference Proceedings

"Recent Developments in the Joining of Stainless Steels and High Alloys"

October 19-21, 1992
Columbus, Ohio

Copies of the meeting materials for this conference are available. The booklet includes 24 extended abstracts (100 pages). $45 AWS, EWI, TWI members; $50 nonmembers (Shipping included). VISA, MASTERCARD, or checks are acceptable. Orders should be sent with payment to:

EWI Information Services Department
1100 Kinnear Road
Columbus, OH 43212, USA