The Effect of Welding Parameters on Penetration in GTA Welds

Base metal sulfur content plays a role in how welding variables affect penetration

A. A. SHIRALI AND K. C. MILLS

ABSTRACT. The effect of various welding parameters on the penetration of GTA welds has been investigated. Increases in welding speed were found to reduce penetration; however, increases in welding current were observed to increase the penetration in high sulfur (HS) casts and decrease penetration in low sulfur (LS) steels. Plots of penetration as a function of increasing linear energy (the heat supplied per unit length of weld) revealed a similar trend with increased penetration in HS casts, but the penetration in LS casts was unaffected by increases in linear energy. These results support the Burgardt-Heiple proposition that changes in welding parameters on penetration can be explained in terms of their effect, sequentially, on the temperature gradient and the Marangoni forces operating in the weld pool. Increases in arc length were found to decrease weld penetration regardless of the sulfur concentration of the steel, and the effects of electrode geometry and welding position on weld penetration were also investigated.

Introduction

The problem of "cast to cast" variations in weld penetration produced during autogenous gas tungsten arc (GTA) welding of stainless and ferritic steels has been attributed (Ref. 1) to changes in both the direction and magnitude of the fluid flows in the weld pool, and these are associated with differences in the concentration of surface active elements such as sulfur and oxygen present in the various casts. It was also suggested (Ref. 1) that the fluid flow was dominated by the Marangoni (or thermocapillary) forces operating in the weld pool; these are the result of the large temperature gradients across the pool which, firstly, create a surface tension gradient and then a surface flow from the low to high surface tension regions. Heiple and Roper (Ref. 1) pointed out that when the sulfur or oxygen* concentration exceeded a certain critical value (around 50 ppm) the temperature coefficient of surface tension (dg/dT) changed from a negative to a positive value. It can be seen from Fig. 1A that for a cast with low sulfur (LS) concentrations, the thermocapillary forces resulting from the temperature gradient will produce a radially-outward flow of hot metal. Thus, melt-back of the steel will occur at the edges of the pool, thereby producing a shallow weld. In contrast, for steels with high sulfur (HS) contents the thermocapillary force resulting from the temperature gradient will produce a radially-inward flow (Fig. 1B) which will carry hot metal to the bottom of the weld pool. Consequently, melt-back of the steel will occur at the bottom of the pool and a deep weld will result.

Heiple and Roper (Ref. 1) made two assumptions: 1) that the heat transfer in the weld pool was controlled by the fluid flow in the pool and not the heat conduction in the plate, and 2) that the fluid flow was dominated by the thermocapillary forces. However, the fluid flow in the weld pool is exceedingly complex since, in addition to the thermocapillary forces, buoyancy, electromagnetic (or Lorentz), and aerodynamic drag forces (Refs. 2, 3) can all influence the flow. In general, improved weld penetration would be obtained with higher Lorentz and lower aerodynamic drag forces. However, the situation is further complicated by 1) the front-to-back flow resulting from the relative motion of the workpiece to that of the electrode which is particularly important at high welding speeds and 2) the "spin" developed by the metal when radially inward flows occur (Refs. 4, 5) and which tend to reduce the magnitude of the radially

KEY WORDS

Welding Parameters
Penetration
GTAW
High-Sulfur Casts
Low-Sulfur Casts
Linear Energy
Welding Speed
Arc Length
Workpiece Position
Electrode Geometry

A. A. SHIRALI is with the Department of Metallurgy and Engineering Materials, University of Strathclyde, Glasgow, Scotland. K. C. MILLS is with the Division of Materials Metrology, National Physical Laboratory, Teddington, Middx., England.

**Although the soluble O and S concentrations both affect (dg/dT) and hence the direction of surface flow, it has been shown on thermodynamic grounds (Ref. 8, Figs. 17 and 18) that 1) O does not play a significant part since the Al content of most steels will reduce the soluble O to 3 or 4 ppm and 2) that most other elements (e.g., Mn, Si) do not significantly reduce the soluble S concentration, but Ca, Mg, and Ce, if present in sufficient concentrations, could affect the S content.*

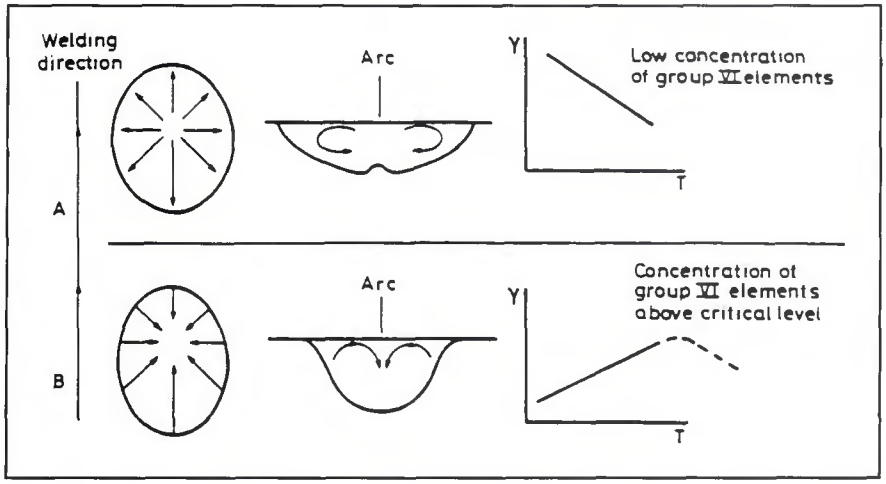

Fig. 1 — Schematic diagram illustrating the Heiple-Roper theory for valuable weld penetration (A) for low sulfur casts and (B) high sulfur casts.

inward flow (Ref. 6).

Burgardt and Heiple (Ref. 7) proposed that since the Marangoni forces are predominant in the weld pool, the effect of welding conditions on penetration can be explained in terms of what effect these changes in conditions would have on the temperature gradient across the weld pool and consequently, on the strength of the thermocapillary forces. Thus it was argued that an increase in the temperature gradient would increase the magnitude of the thermocapillary forces and hence would cause an increase in weld penetration in high sulfur (HS) steels but reduced penetration in low sulfur (LS) casts.

This theory does not take into account the effect which changes in welding conditions could have on the other forces; *e.g.*, an increase in welding current could also increase the Lorentz forces. Mills and Keene (Ref. 8) attempted to predict what effect changes in welding parameters would have on the other forces controlling the fluid flow and various mathematical models (Refs. 2, 9, 10) have been developed to predict qualitatively the effects of such changes. The principal objective of the present study was to check the validity of Burgardt and Heiple's proposition.

In this study, the (depth/width) ratio (D/W) for partial penetration welds was used as the measure of penetration since this criterion appears to be the most widely used and the most reliable measure of penetration. A recent investigation (Ref. 11) has shown that the ratio of the widths of back-to-front welds for complete joint penetration welds is sensitive to other factors and is less reliable than the (D/W) ratio of partial penetration welds. Furthermore, in this investigation, welds were carried out on "thick" plates (6 mm) since there is evidence indicating that departure from three-dimensional heat flow (which can occur in thin plate) does have an effect on the weld profile.

Experimental

Materials

The materials used in this investigation were plates (200 x 50 x 6 mm) of either 304 or 316 stainless steel; the chemical compositions are given in Table 1.

Experimental Procedures

All samples were cleaned prior to welding by removing oxide scale by mechanical abrasion using 320 grit paper and then degreasing. "Bead-on-plate" welds were then carried out down the center of the plate. The samples were mounted on the flat surface of the mobile platform and bead-on-plate welds were performed on at least three samples using identical welding conditions, given in Table 2. These were then sectioned at 5 equally spaced locations along the weld to determine the weld profile; the 20-mm sections at both ends of the sample were disregarded since it was considered that the heat transfer conditions in these sections may differ from that in the other parts of the specimen. The end face of each section was mechanically polished and was then etched with $CuCl_2$ reagent. The weld bead profile revealed after etching was then magnified 5X and traced. The depth (D) and width (W) of the enlarged weld bead was then measured with an ordinary rule with 0.5-mm divisions; the resolution was typically ±2% in the depth and ±1% in the width. The (D/W) ratios of the weld beads were calculated from the above measurements.

Data Analysis

Despite the fact that the welds were carried out using apparently identical welding conditions, it was always observed that there was some variation in the (depth/width) ratio from section to section within one weld and from weld to weld. Consequently, in order to establish whether the differences in weld penetration between casts have statistical significance, it is necessary to determine the (depth/width) ratio for a number of sections and welds. In this study, three welds were carried out, and these were sectioned at five locations.

Techniques for determining the statistical significance of the variations in weld penetration recorded for different casts have been reported by Lambert (Ref. 12). In the present study the variance between sections, (s_0^2) was derived and also the variance (s_y^2) associated with the variations of (D/W) values for all 15 Sections from the mean (D/W) value, as determined by Equation (1):

$$\sigma_x^2 = \sum(\chi_A - \overline{\chi})^2 + (\chi_B - \overline{\chi})^2 + (\chi_C - \overline{\chi})^2 + \ldots / (n-1) \quad (1)$$

where x = (D/W), x = mean (D/W) for 15 sections, x_A = (D/W) for section A, and n = number of sections.

Results and Discussion

The effect of the following welding parameters on penetration were determined: 1) welding current (I), 2) welding speeds (S_W), 3) arc length (L), 4) electrode geometry, 5) effect of welding posi-

Table 1 — Chemical composition and sheet thickness of the stainless steel samples

		Chemical Composition (Balance - Fe)							
Steel	Thickness (mm)	S ppm	P ppm	C %	Si %	Mn %	Mo %	Cr %	Ni %
316S16	6	130	400	0.070	0.360	1.78	2.85	15.74	9.55
316L	6	95	330	0.042	0.372	1.55	2.47	15.97	9.73
316	6	75	250	0.043	0.391	1.40	0.092	17.86	8.36
316S12	6	34	310	0.039	0.539	1.54	2.53	16.3	10.24
316 LS	6	15	350	0.042	0.136	1.92	2.70	11.2	17.25
304 MS	6	50	327	0.043	0.153	1.55	0.79	9.77	18.21

Table 2 — Welding conditions used in the study of the effect of individual welding parameters on weld penetration

Parameter Studied	Range[a]	Steels Studied (S content ppm) LS	MS	HS	Welding Conditions S_w (mm s^{-1})	I (amps)	V (volts)	L (mm)	θ (°)		Gas	Flow (1 min^{-1})
S_w	1.25	316	304	316		150, 175	—	3	60	Downhand	Ar	7.1
	2.5	(15)	(50)	(95)	—	150-250	—	3	60	(0°)	(HP)*	
	3.75					175-275	—	3	60			
I	150	316		316	2.5	—	—	3	60	Downhand	Ar	7.1
	175	(15)		(95)						(0°)	(HP)	
	200											
	225											
	250				3.8							
L	2		316	316			17			Downhand	Ar	7.1
	3		(75)	(130)			18			(0°)	(HP)	
	5						18					
	8						20					
	10						20.5					
θ	15		316	316	2.5	240	17	3	—	Downhand	Ar	7.1
	45		(75)	(130)			18			(0°)	(HP)	
	60						18					
	90						17					
Frustrum	60°		316	316	2.5	240		3		Downhand	Ar	7.1
Electrode			(75)	(130)						(0°)	(HP)	
Position	0° (b)			316	2.5	220	—	3	60	—	Ar	7.1
	45° (b)			(130)							(HP)	
	90° (b)											
	180° (b)											

a) Units given in this column are identical to those given in relevant vertical columns
b) Angle of workpiece relative to the horizontal eg Downhand = 0°
*HP - High Purity

tion, and 6) effect of torch gas. Where possible, these studies were carried out on high (HS), medium (MS) and low (LS) sulfur steels, and the experiments were conducted by maintaining all welding parameters constant except that being investigated.

Welding Speed and Welding Current

The effect of welding speed (S_w) on weld penetration (*i.e.*, (D/W) ratio) was studied at three different welding speeds. These investigations were carried out on LS, MS and HS casts, and it can be seen from the results presented in Table 3 that increasing welding speed (at constant current) resulted in decreasing weld penetration for both LS and HS casts.

Burgardt and Heiple (Ref. 7) proposed that since at lower speeds both the peak temperature and the temperature gradient across the weld pool surface would be higher than at higher speeds, then thermocapillary forces would be larger at lower speeds. Consequently, they suggested that increasing welding speed would result in increasing penetration for LS casts and decreasing penetration for HS casts. However, other investigations have reported that increasing welding speeds caused reductions in depth (Ref. 13), width (Refs. 13, 14) and (D/W) ratios (Ref. 15) for both high and low sulfur casts. The results of the present investigation are in agreement with these findings.

The effect of welding current on weld penetration was determined using currents between 150 and 275 A. The results presented in Fig. 2 show that for a welding speed of S_w = 2.5 mms^{-1}, increasing current resulted in increased penetration for the HS cast and decreased penetration for the LS cast. A maximum in the (D/W)-current relationship for the HS cast was observed to occur around 200 A, but it is possible that this maximum is merely the result of experimental uncertainties in the measurements. Nevertheless, it was noted that Burgardt and Heiple (Ref. 7) also observed a similar maximum for a HS cast around 200 A. The results obtained at a higher welding speed (S_w = 3.75 mms^{-1}) indicated that increases in current had little effect on weld pen-

Table 3 — Collated data for the variation of depth, width and (D/W) ratio as a function of welding currents and speed (s_w)[a]

Steel (S content ppm)	S_w (mm s^{-1})	150 amps Mean Values D (mm)	W (mm)	D/W	175 amps Mean Values D (mm)	W (mm)	D/W	200 amps Mean Values D (mm)	W (mm)	D/W	225 amps Mean Values D (mm)	W (mm)	D/W	250 amps Mean Values D (mm)	W (mm)	D/W	275 amps Mean Values D (mm)	W (mm)	D/W
316 LS	1.25	2.94	10.87	0.27	3.94	13.38	0.29												
(15)	2.50	1.81	7.61	0.24	2.04	8.64	0.23	2.13	10.11	0.21	2.30	11.28	0.20	2.46	12.66	0.19	—	—	—
	3.75	—	—	—	1.48	7.66	0.19	1.67	8.67	0.19	1.78	9.68	0.18	1.98	10.37	0.18	2.22	11.43	0.19
316 HS	2.50	1.46	4.11	0.35	2.51	6.77	0.37	3.37	8.31	0.40	3.67	9.43	0.39	3.93	10.42	0.38	—	—	—
(95)	3.75	—	—	—	2.10	6.32	0.33	2.34	7.23	0.32	2.66	8.04	0.33	2.90	9.44	0.31	3.26	10.21	0.32
304 MS (50)	1.25	3.34	9.88	0.34	4.05	11.57	0.35												

[a](All parameters such as arc length, V, welding speed and current were kept constant, except that parameter being studied)

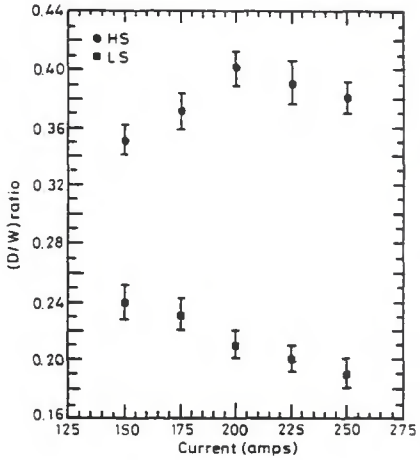

Fig. 2 — The (depth/width) ratio as a function of welding current, I, represents the standard deviation, σ_γ derived from Equation 1.

etration for both HS and LS casts.

Burgardt and Heiple (Ref. 7) suggested that increasing current would increase the temperature gradient and hence would increase the thermocapillary forces and thus would result in increasing penetration in HS casts and decreasing penetration in LS casts. The results presented in Fig. 2 are in agreement with this proposition. However, Mills and Keene (Ref. 8) have pointed out that increasing current would also lead to increased electromagnetic and aerodynamic drag forces and that these could also affect the weld profile, that is, deeper and shallower penetration, respectively.

Since the weld penetration is apparently dependent upon the temperature gradient and hence the heat input, which in turn, is affected by both the welding speed and current, it would seem appropriate to correlate weld penetration with linear energy (LE) as defined in Equation (2):

$$LE = IV/S_W \qquad (2)$$

Since only one parameter was varied at any one time, and the voltage was maintained at a constant level, the transfer efficiency was assumed to be approximately constant in these experiments.

The relationships between linear energy and the (D/W) ratio for HS, MS and LS casts are shown in Fig. 3. Although the data show considerable scatter (possibly due to other effects associated with differences in welding speed) the trend of increasing energy can clearly be seen for the HS and MS casts, although the relationship may not be linear as shown in Fig. 3. For the LS casts, the (D/W) ratio was found to be unaffected by linear energy, within the bounds of experimental uncertainty. It is possible that the behavior observed with LS casts results from a balance between the reduced penetration resulting from increased thermocapillary forces at higher linear energies and the deeper penetration associated with higher Lorentz forces.

Arc Length

The effect of arc length on weld penetration was investigated on HS and MS casts. The results presented in Fig. 4 show that the (D/W) ratio decreases with increasing arc length and are thus consistent with those obtained by other investigators (Refs. 7, 14).

A review of published data (Ref. 8) indicated that increasing the arc length would have the following effects:

1) Increase the relative strength of the aerodynamic drag force (Refs. 16, 3).

2) Increase the size of the anode root, thus decreasing the temperature gradient (Refs. 7, 17).

3) Reduce the arc efficiency when using a constant current.

4) Increase the arc voltage if the current is maintained constant.

Since the first three factors would all be expected to reduce penetration, the results shown in Fig. 4 are in line with expectation and indicate that the beneficial effects of sulfur on penetration are lost at high arc lengths.

It was also observed that increasing the arc length also resulted in more oxidation of the weld surface, and that slag spots appeared on the surface when the arc length exceeded 8 mm. These spots were observed to spin in the weld pool and tended to agglomerate. When they exceeded a certain critical size, they were thrown to the rear of the pool where they solidified. At arc lengths of 10 mm, the oxidation of the HS cast was more severe than that of the MS, the entire surface of the HS weld being covered with an oxide film with a dark appearance, which is usually associated with poor penetration (Ref. 18).

Electrode Geometry

Effect of Vertex Angle (θ)

The influence of increasing vertex angle (*i.e.*, blunter electrode) on weld penetration was studied on MS and HS casts for θ values between 15 and 90 deg. The results shown in Fig. 5 indicate that the (D/W) ratio increased with increasing vertex angle. A qualitative description of the results obtained in other investigations (Refs. 7, 15, 21–29)

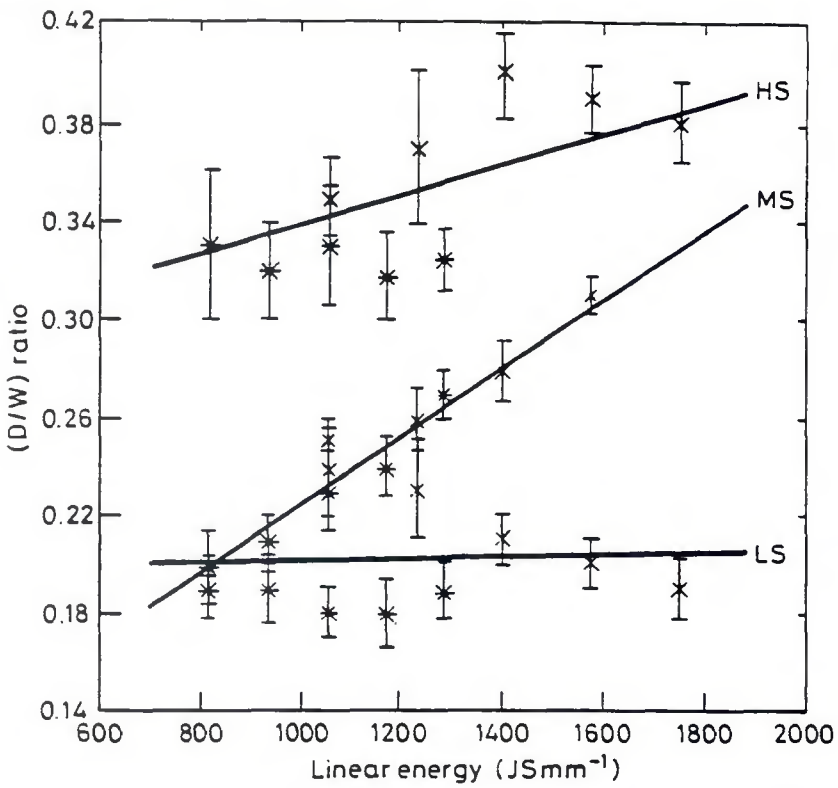

Fig. 3 — The (depth/width) ratio as a function of the linear energy (defined in Equation 2); I represents the standard deviation derived from Equation 1.

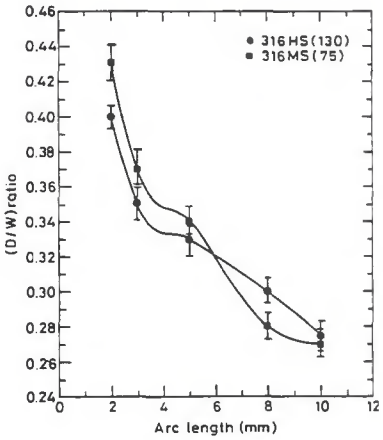

Fig. 4 — The (depth/width) ratio as a function of the arc length; I represents the standard deviation, σ_γ, derived from Equation 1.

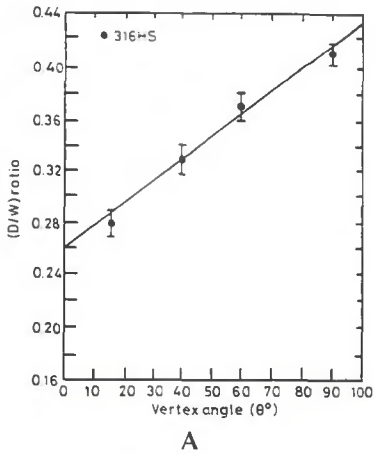

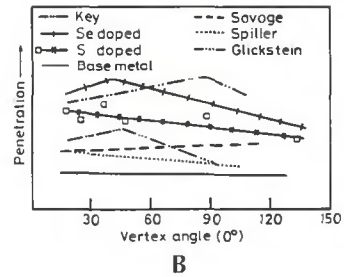

Fig. 5 — The (depth/width) ratio as a function vertex angle, q. (a) The results of the present investigation, (b) qualitative results for this relationship reported by other investigators: Key (Ref. 19); Se doped (Ref. 7); S doped (Ref. 7); LS base metal (Ref. 7); Savage (Ref. 20); Spiller (Ref. 21); Glickstein (Ref. 15).

is given in Fig. 5b. It can be seen that there is no consensus in the trends in the (D/W)-θ relationships which have been reported in the literature. The results obtained in this investigation were consistent with those reported by Key (Ref. 19) and Savage (Ref. 20). The evidence for the existence of a maximum at θ = 45 deg could not be observed in the present study.

It has been suggested (Refs. 8, 22) that the principal effects of increasing vertex angle would be to increase the anode root size. This might be expected to result in 1) lower temperature gradients and ,thus, thermocapillary forces, and 2) lower Lorentz forces. Consequently, in HS casts both of these effects would be expected to cause decreases in weld penetration with increasing vertex angle. The results of the present investigation are not in agreement with this proposal

The Effect of Welding with a Frustrum-Shaped Electrode

Okada and Nakamura (Ref. 11) proposed that differences in weld penetration obtained with HS and LS casts can be reduced by the use of a frustum-shaped electrode (wedge-shaped with tip tapered at 60 deg, *i.e.*, screwdriver-shaped) aligned transverse to the weld direction. Welds were carried out with the electrodes aligned both transverse and parallel to the welding direction. The (D/W) results are compared with those obtained with the conventional, conical electrode in Table 4.

It can be seen that the use of a frustum electrode does tend to reduce the differences in weld penetration between casts with different S concentrations, although in this study the penetration differences were unaffected by the alignment of the electrode. This may be associated with the fact that Okada and Nakamura (Ref. 11) 1) carried out full-penetration welds, *cf.* partial penetration welds in this study; and 2) compared LS and MS casts, *cf.* MS and HS casts in this investigation.

Effect of Workpiece Position

The effect of the workpiece position, relative to the horizontal, on the weld penetration of a HS cast was studied using fixed welding conditions. The various positions used are shown schematically in Fig. 6, and measurements were carried out using various torch gases (high purity argon (HP Ar), (HP Ar + 1%SO_2), and (HP Ar + 1% O_2)). The depth of penetration was measured as the distance between the original surface of the metal to the base of the weld. It can be seen that highest (D/W) ratios were usually recorded using the flat (0 deg) position — Fig. 7.

The direction of the thermocapillary, Lorentz and the gravitational forces acting on the weld pool are shown in Fig. 6. In order to maintain clarity, the aerodynamic drag force (which will operate in a radially outward direction) and buoyancy forces (from hot to cold regions) have been excluded from the diagram. However at the short arc lengths used in this study, the magnitude of the forces will be relatively small for the positions corresponding to 45 and 90 deg. It can be seen from Fig. 6 that the gravitational force tends to cause liquid metal to trickle from the upper to the lower part of the weld, and this resulted in some "humping" and "undercutting." Since this did not occur in the "overhead" (180 deg) position, it was concluded that the surface tension forces in this case are of sufficient magnitude to withstand the gravitational force.

Inspection of Fig. 7 shows that the introduction of 1% of SO_2 or O_2 into the torch gas results in a marked decrease in the weld penetration. This, at first sight, would appear to contradict the Heiple-Roper theory, but Heiple and Roper (Ref. 23) have reported that O_2 and SO_2 additions are only beneficial in concentrations less than 800 ppm (0.08%), and further additions of these gases resulted in a gradual decrease in penetration. Thus, the results of the present investigation in which additions of 1% O_2 and SO_2, were used are in agreement with those recorded by Heiple and Roper (Ref. 23).

Several explanations have been proposed for the maximum in penetration which occurs around 800 ppm for both O_2, or SO_2, such that the additions above 800 ppm 1) increase the size of the anode root, 2) alter the arc charac-

Table 4 — Weld penetration results for welds carried out with conical and frustum electrodes

Electrode/Alignment	MS		HS	
	D/W	σ_o (σ_γ)	D/W	σ_o (σ_γ)
Conical (60°)	0.28	.0076 (.0013)	0.37	.005 (.0014)
Frustum/parallel to welding direction	0.27	.009 (.0014)	0.257	.006 (.0012)
Frustum/transverse to welding direction	0.313	.011 (.0011)	0.300	.0076 (.0016)

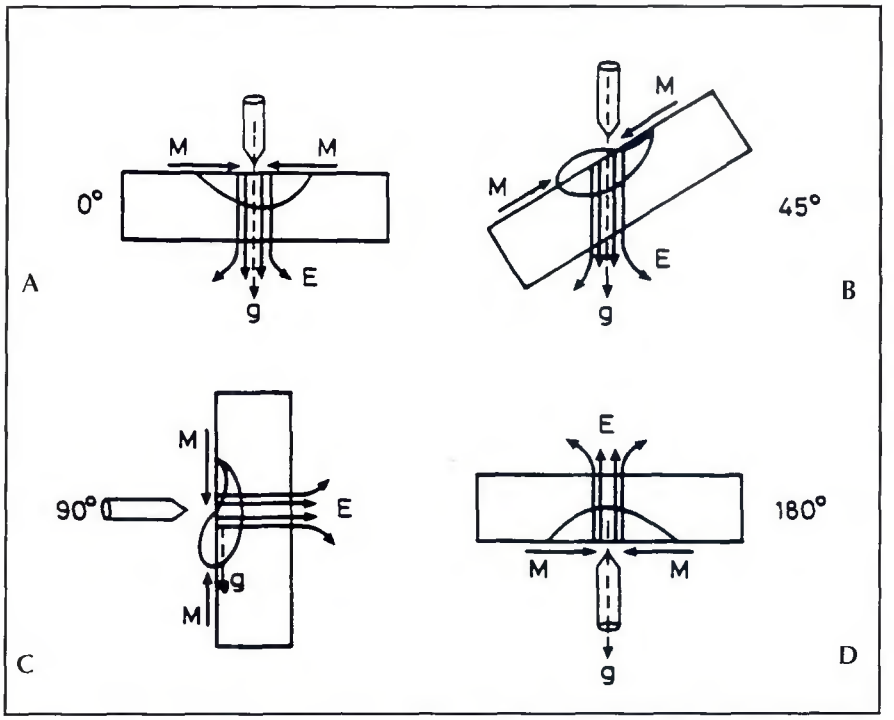

Fig. 6 — Schematic drawing showing the effect of workpiece position (relative to the horizontal) on the weld profile and showing the effect of Electromagnetic (E) Maragoni (thermocapillary) (M) and the gravitational force (g). The buoyancy (B) and aerodynamic drag (A) forces have been excluded to maintain clarity, B would operate in a direction of hot to cold regions and A would be radially outward flow.

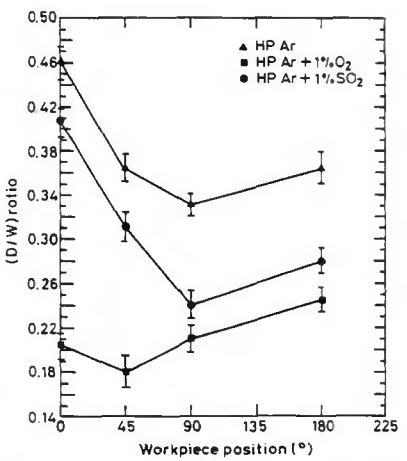

Fig. 7 — The (depth/width) ratio as a function of workpiece position (relative to horizontal) HP, AR, HP Ar + 1% O_2 and HP Ar + 1% SO_2.

teristics, and 3) oxidize the surface and form slag films which virtually eliminate the thermocapillary forces (Ref. 8). It was noted that the cross-sectional area of the welds was reduced by > 30% when 1% O_2 or SO_2 was added to the torch gas. This suggests that the heat input is reduced as a result of either alterations to the arc characteristics or a decrease in the arc efficiency due to the formation of an oxide filin. The latter view is supported by the observation that the surfaces of the welds carried out using torch gases with additions of O_2 and SO_2 were covered with oxide films in contrast to the clean surface obtained using high-purity argon.

Conclusions

1) Weld penetration was found to decrease with increasing welding speed for low, medium and high sulfur casts.

2) Increased welding current was found to increase the weld penetration in high sulfur casts but decreased penetration in low sulfur casts, which was in agreement with the findings of Burgardt and Heiple (Ref. 7).

3) Increasing linear energy (which is dependent upon both welding speed and current) was found to cause increases in penetration for low and medium sulfur casts but had little effect on penetration in low sulfur steels. These results support the view that changes in linear energy affect weld penetration by altering, sequentially, the temperature gradient and then the magnitude of the thermocapillary forces operating in the weld pool.

4) Increases in arc length were found to decrease weld penetration. This is in agreement with the observations of other workers (Refs. 7,14).

5) Weld penetration was found to increase with increasing vertex angle of the electrode for medium and low sulfur casts. The use of frustrum electrodes was found to reduce the differences in weld penetration for casts with different sulfur contents.

6) Additions of 1% oxygen or SO_2 were found to reduce weld penetration, which was in agreement with the observation (Ref. 7) that for improved penetration the optimum concentration of these gases is about 800 ppm.

7) The weld penetration was deepest for the flat position.

References

1. Heiple, C. A., and Roper, J. R. 1982. Mechanism for minor element effect on GTA fusion zone geometry, *Welding Journal* 61(4)975.

2. Matsunawa, A., Yokoya, S., and Asako, Y. 1987. Factors governing liquid motion in the weld pool and their effects on penetration shape. *Trans JWRI* 16(2)1.

3. Matsunawa, A., Yokoya, S., Okada, T., and Asako, Y. 1988. Model experiments of weld pool convection and penetration shape in TIG arc welding. IIW Doc. 212-707-88.

4. Ajayi, D. O., Sozou, C., and Pickering, W. M. 1984. Nonlinear fluid motions in a container due to the discharge of an electric current. *J Fluid Mechanics 148:* 285.

5. Lancaster, J. F. 1987 The stability of meridonal liquid flow induced by a gradient of surface tension or by electromagnetic forces. IIW Doc. 212-682-87.

6. Okada, T., Yokoya, S., and Ishizaki, A. 1988. Effect of surface-active elements on TIG arc welding phenomena. IIW Doc. 212-708-88.

7. Burgardt, P., and Heiple, C. A. 1986. Interaction between impurities and welding parameters in determining GTA weld shape. *Welding Journal 65*:150-s.

8. Mills, K. C., and Keene, B. J. 1990. Factors affecting variable weld penetration. *Intl. Materials Rev. 35*(4):185.

9. Oreper, G. M., Eagar, T. W., and Szekely, J. 1986. The role of transient convection in the melting and solidification in arc weld pools. *Met Trans* 17B, 733.

10. Oreper, G. M., and Szekely, J. 1984. Heat and fluid flow phenomena in weld pools. *J Fluid Mechanics* 147:55.

11. Okada, A., and Nakamura, K. 1988. National Research Institute for Metals, Tokyo, report, cited by K. C. Mills, 1990. Interlaboratory comparison program on variable weld penetration. VAMAS Technical Report 10, published by National Physical Laboratory.

12. Lambert, J. A. 1988. Experimental design and statistical analysis for the VAMAS project on weld penetration. CEGB Marchwood Engineering Laboratory, Report RD/M/1741/RR88.

13. Binard, J., Report from Excel "S,"Nantes, France. Work cited in K. C. Mills 1990 Interlaboratory comparison program on variable weld penetration. VAMAS Technical Report 10.

14. Ishizaki, K., Yokoya, S., and Okada, T. 1988. Weldability of stainless steel. Report

from Nippon Institute of Technology Saitama, Japan, cited in K. C. Mills 1990 Interlaboratory comparison program on variable weld penetration. VAMAS Technical Report 10.

15. Glickstein, S. S., Friedman, E., and Yenizavich, W. 1975. Investigation of alloy 600 welding parameters. *Welding Journal* 54(4):113-s.

16. Matsunawa, A., Yokoya, S., and Asako, Y. 1987. Convection in weld pool and its effect on penetration shape. IIW Doc. 212-687-87.

17. Tsai, N. S. 1983. Ph.D. thesis , Massachusetts Institute of Technology.

18. Oyler, G. W., Matuszek, R. A., and Carr, C. R. 1967. Why some heats of stainless steel may not weld. *Welding Journal 46*: 1006.

19. Key, J. F. 1980. Anode/cathode geometry and shielding gas interrelationships in GTAW. *Welding Journal 59*(12):364-s.

20. Savage, W. J., Struck, G. S., and Ishikawa, Y. 1965. The effect of electrode geometry in gas tungsten arc welding. *Welding Journal* 44(11): 489-s.

21. Spiller, K. R., and MacGregor, G. S. 1971. *Advances in Weld Processes*, pp. 82--88, The Welding Institute, Abington, U.K.

22. Hiraoka, K., Okada, A., and Inagaki, M. 1986. Effect of electrode geometry on maximum arc pressure in GTA weldments. IIW Doc. 212-652-86.

23. Heiple, C. R., Burgardt, P., Roper, J. R., and Long, J. L. 1983. The effect of trace elements on TIG weld penetration. Proc. of Conference on the Effects Residual Impurity and Microalloying Elements on Weldability and Weld Properties, paper 36, The Welding Institute, Abington, U.K.