WELDING RESEARCH

SUPPLEMENT TO THE *WELDING JOURNAL*, FEBRUARY 1994
Sponsored by the American Welding Society and the Welding Research Council

The Possible Role of Turbulence in GTA Weld Pool Behavior

Preliminary results from this investigation indicate the need for reevaluation of the previous models based on laminar flow

BY R. T. C. CHOO AND J. SZEKELY

ABSTRACT. A critical comparison of experimental measurements and the theoretical prediction of weld pool shapes in gas tungsten arc welding operations suggests that the postulate of laminar flow behavior in the weld pool may not provide a realistic prediction of the weld pool shapes, especially for weld pools deeper than about 1 mm. Furthermore, there appears to be a considerable body of evidence that suggests that the flow in weld pools may be turbulent or at least transitional. In this paper, preliminary computed results are presented describing weld pool circulation using various turbulence models, and these results appear to provide a much better agreement with measurements. These findings suggest that previous modeling efforts postulating laminar flow behavior should be critically reexamined.

Introduction

The concept of modeling fluid motion in weld pools was first proposed by Shercliff (Ref. 1), but the first comprehensive treatment of the problem, with allowance for both heat transfer and mass transfer, was not developed until 1983 (Ref. 2). Since that time numerous papers had been published (Refs. 2–9) dealing with various aspects of the problem. Recent points of interest included the detailed study of thermocapillary flow, the behavior of free surfaces and the study of the resultant microstructures. A recent development has provided a coupling between the behavior of the welding arc and the weld pool (Ref. 10) by predicting, rather than postulating, the heat and current fluxes falling on the free surface of the weld pool.

Up to the present, relatively little work has been done to provide a direct, systematic comparison of the experimentally measured and the theoretically predicted weld pool shapes, although there is some evidence that the current weld pool modeling efforts appear to be "on the right track." It is stressed that laminar flow has been explicitly assumed in all the weld pool modeling efforts up to the present. The purpose of this paper is to critically examine the appropriateness of this assumption and to present some preliminary computed results exploring the implications of turbulence in weld pools.

There appears to be some evidence, both physical and fundamental, that would suggest that the velocity fields in weld pools may not be fully laminar, but would approach mildly turbulent or at least transitional flow. Visual observation of weld pools indicates unsteady, chaotic behavior that one would associate with the transition to turbulence. There is no known direct measurement of turbulent velocity fluctuations in weld pools other than visual observation. The reason is that it is extremely difficult to directly measure such velocity fluctuations in a small (~5-mm radius) highly heated pool under the influence of a welding arc. However, some elementary calculations by Malinowski-Brodnicka, *et al.* (Ref. 11), had supported the concept that the pool circulation could be turbulent.

On a more fundamental basis, the very high shear rates that one could associate with free surface velocities of the

KEY WORDS

Weld Pool Behavior
Turbulent Flow
Transitional Flow
Weld Pool Circulation
Flow Velocity
Weld Pool Modeling
Weld Pool Dimensions
Transport Equations
Momentum Equations vs. Laminar Flow

R. T. C. CHOO is with the Department of Metallurgy and Materials Science, University of Toronto, Toronto, Ontario, Canada. J. SZEKELY is with the Department of Materials Science and Engineering, Massachusetts Institute of Technology, Cambridge, Mass.

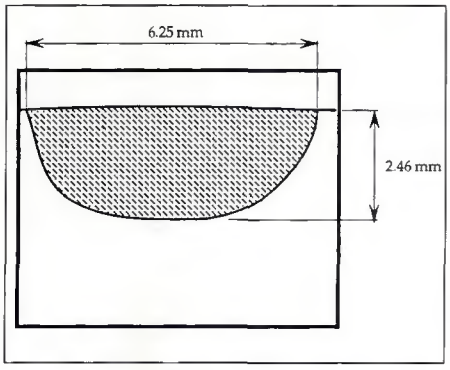

Fig. 1 — Experimental weld pool shape for 100 A (Ref. 13).

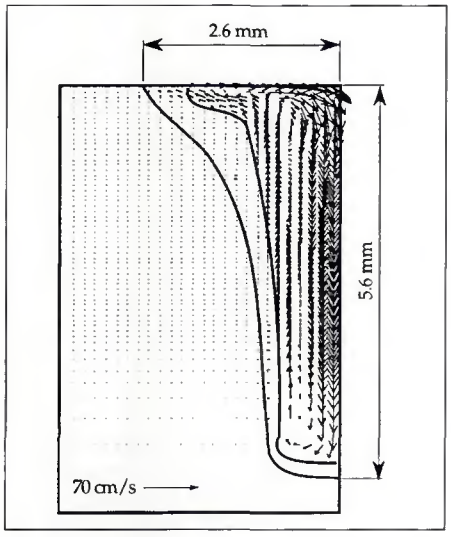

Fig. 2 — Calculated weld pool shape based on laminar physical properties (Ref. 14). The physical properties in the solid phase are assumed constant.

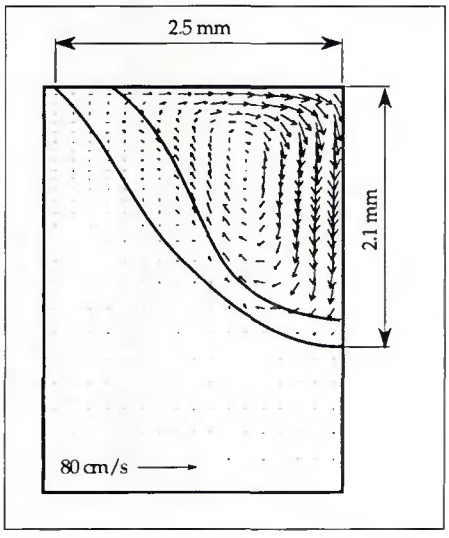

Fig. 3 — Calculated weld pool flow profile using effective transport properties in the melt (30 times laminar viscosity) and variable properties in the solid phase as given in Fig. 5.

order of 0.5 to 1.0 m/s could well lead to instabilities and, hence, to the onset of turbulent fluctuations. Two additional semiquantitative points may be made at this stage. One of these is that the general weld pool shapes observed in practice tend to be quite rounded (Ref. 12), which would indicate turbulent, rather than laminar flow behavior, which has strong directionality in the flow field. The other is that the apparent insensitivity of many welding operations to changes in certain input parameters can well be explained by the "leveling effect" of turbulence, which will tend to provide a more uniform temperature field in the system.

The present investigation was triggered by a recent attempt at comparing the theoretically predicted weld pool shapes with measurements. Here Fig. 1 (Ref. 13) shows the experimentally measured weld pool profiles at 100 A, while Fig. 2 (Ref. 14) shows the corresponding theoretical prediction, based on the assumption of laminar flow. The disparity in these two sets of results is readily apparent. No satisfactory explanation could be advanced for this discrepancy. However, upon postulating mildly turbulent behavior, and suggesting that in order to account for the consequences of this postulate, assigning a 30-fold increase in the effective viscosity and the corresponding change in the effective thermal conductivity, one could obtain a better qualitative agreement between measurements and predictions, as seen on comparing Figs. 1 and 3. The reasons for this arbitrary assignment of this effective viscosity value will be discussed in detail in the text.

If weld pools were turbulent, or at least in the transitional regime, this would have far reaching implications regarding the current modeling efforts aimed at representing weld pool behavior. Simply put, if the flow were turbulent, the effective viscosity and thermal conductivity would be significantly higher, giving a markedly different weld pool shape and significantly different mode of heat and momentum transfer within the pool itself. Indeed, many of the conclusions based on the laminar fluid flow analysis may have to be revised.

In the following, we shall present some highlights of the mathematical formulation of the problem, together with some computed results, that should provide a first attempt at this important and rather novel problem.

Mathematical Formulation

At this point, recourse has to be made to a turbulence model. The mildly turbulent conditions to be anticipated in the system are difficult to represent and may require rather sophisticated modeling techniques (Refs. 15, 16). In the present case, two turbulence methods are employed for this purpose: the first assumes a constant effective viscosity, while the second employs the K-ε model (Ref. 17), which has been used in a large number of engineering studies. These two approaches should be quite satisfactory as initial, scoping, approaches in the full realization that more sophisticated tools will be required for the more detailed study of these phenomena.

Figure 4 shows a schematic representation of the welding process, as well as the computational domain. The following assumptions are used for the K-ε model: 1) isotropic turbulence is assumed but spatially variable turbulent viscosity is used; 2) density fluctuations due to turbulence are negligible; 3) heat capacity is assumed constant; and 4) fluid is incompressible. The detailed description of the governing equations, source terms and boundary conditions have been treated elsewhere (Refs. 14, 18–20). Here, just the highlights of the turbulence components will be presented. A detailed description of the K-ε model is given by Launder and Spalding (Ref. 17).

The effective viscosity and effective thermal conductivity are calculated as the sum of their molecular and turbulent components:

$$\mu_{eff} = \mu + \mu_t \tag{1}$$

$$k_{eff} = k + k_t \tag{2}$$

where the nonsubscript symbol represents the molecular value, and the subscripts t and eff represent the turbulent and effective components, respectively. The turbulent thermal conductivity is related to the turbulent viscosity by the turbulent Prandtl number:

$$Pr_t = \frac{C_p \mu_t}{k_t} = 0.9 \tag{3}$$

where C_p is the specific heat capacity.

Material Properties and Solution Technique

The base metal is AISI 304 stainless steel. The composition and physical properties are given elsewhere (Ref. 14). The temperature-dependent properties of the solid phase, as shown in Fig. 5A–C, are compiled from data found in the literature (Ref. 21). The heat flux, current flux, plasma temperature at the weld pool surface and the surface plasma velocity shown in Fig. 6A and B are for a tungsten electrode (2-mm diameter) with 1.5-mm arc length and argon shielding gas (Ref. 19). The cathode spot current density is assumed to be 45 A/mm² with an arc current of 100 A. The workpiece size is 40 x 40 x 12.5 mm (1.6 x 1.6 x 0.5

in.), and stationary gas tungsten arc welding is examined in this paper. The numerical package PHOENICS (Ref. 22) was used to solve the transport equations. Detailed descriptions of the methodology have been previously reported (Refs. 14, 18–20).

Computed Results

In the following, we shall present a set of the computed results, which will be compared with the experimental measurements reported by Zacharia, *et al.* (Ref. 13). Three cases will be considered, corresponding to 50-, 100- and 150-A arc currents, respectively.

Figure 7A–D shows a comparison of the experimentally determined pool profile for the 100-A case, with three sets of computed results, namely: laminar flow; a constant effective viscosity in the melt, which is 30 times that of the molecular value; and calculations based on the K-ε model. It is seen that the assumption of laminar flow would give a weld pool shape that is totally different from the measurements, while the allowance for turbulence, especially the use of the K-ε model, would give a much more realistic weld pool shape.

Figure 8A–C shows a similar situation for a 50-A current and in essence the situation is very similar to that seen in the previous Fig. 7A–D. Laminar flow would give a deep, but narrow weld pool, while the allowance for turbulence (even if quite approximate) would allow us to represent the rather broad, rounded shape that has been found in practice.

For Fig. 9A–C, it is seen that the overall trends are quite similar in that the assumption of laminar flow would give a pool shape that is very different from that found in the experiments, although the agreement between the predictions based on the turbulence model and the experimental measurement is only semi-quantitative.

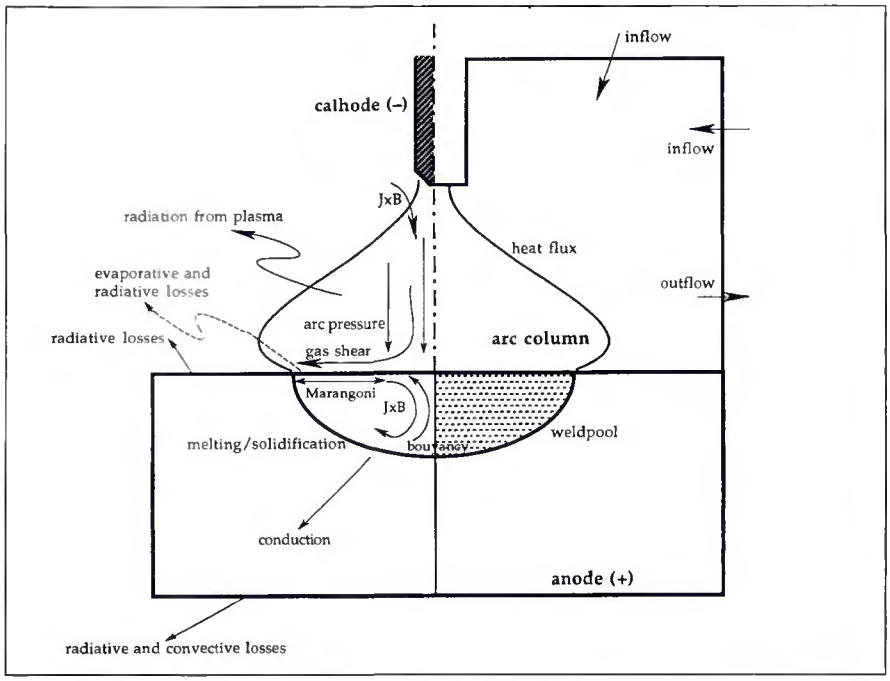

Fig. 4 — Schematic representation of combined gas tungsten arc and weld pool phenomena. The left portion indicates the various physical phenomena occurring within the workpiece while the right portion shows the computational domain.

Figure 10A and B illustrates the effect of turbulence on the radial distribution of the temperature and the velocity at the free surface. It is seen that for turbulent conditions, both the free surface temperature and the free surface velocity will be reduced — compared to the values calculated for laminar flow. This is to be expected because turbulence will provide for a more effective means of transporting both momentum and thermal energy.

It has been shown that even mildly turbulent conditions appear to have a major influence over the shape of the weld pool. For this reason, it is of interest to explore the effect of the effective viscosity more explicitly. Note that the effective thermal conductivity is related to the effective viscosity.

The calculations performed using the K-ε model provide information on the numerical values of the effective viscosity, subject to the caveats that apply to the K-ε model in general. Such contour plots are shown in Fig. 11A–C, which indicate that the effective transport coefficients will increase with pool size and that their numerical values fall within the range (20–30 times the molecular value) where significant changes on the pool shape would be brought about by the turbulent transitional nature of the flow.

Figure 12A–F shows the effect of the numerical value chosen for the effective viscosity on the weld pool shape. These plots have been developed for a constant, uniform value of the effective transport coefficients. The physical properties employed for the solid metal have temperature dependent properties as given in Fig. 5A–C. It is seen that for the conditions chosen, up to a five-fold enhancement will have very little effect on the weld pool shape, but once the effective transport coefficients are increased by a factor larger than 10, quite significant changes will occur. The implications of these findings will be discussed subsequently.

Discussion

In this paper we present a critical comparison of experimentally measured weld pool dimensions with the results of theoretical predictions, based on a transport model, which provided for a combined

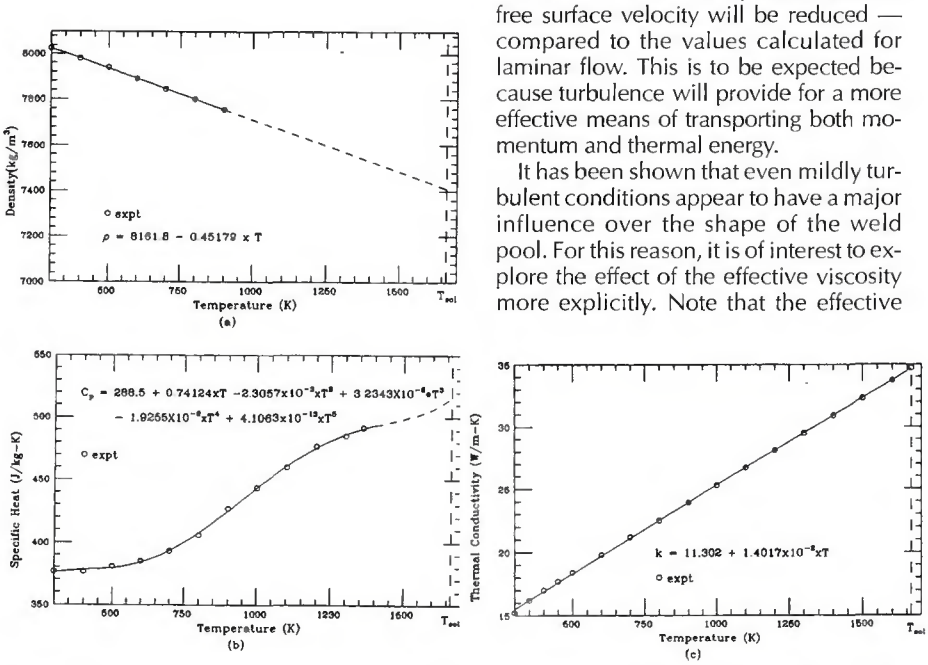

Fig. 5 — Temperature-dependent physical and transport properties in the solid phase for AISI 304 (Ref. 21). A — Density; B — specific heat; C — thermal conductivity.

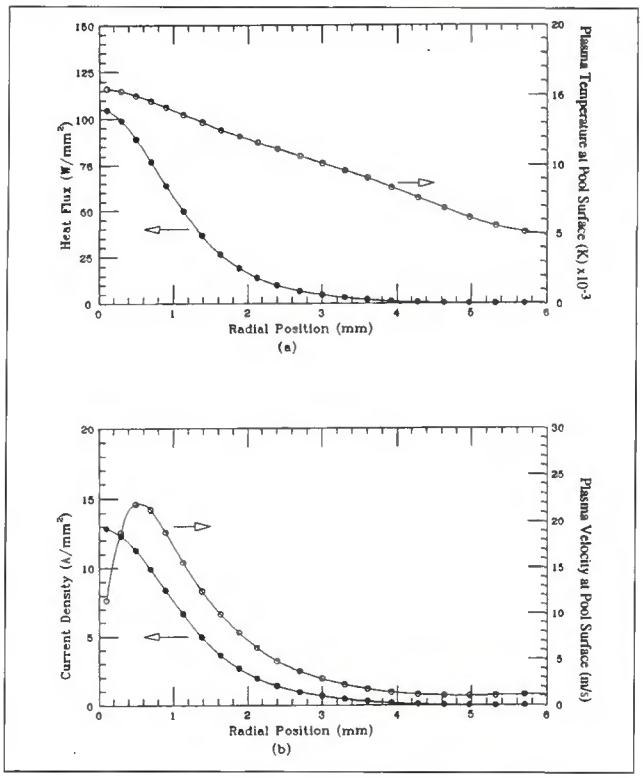

Fig. 6 — Plot of A — heat flux and surface temperature; B — current flux and surface velocity as a function of radial position for a 100-A arc at 1.5-mm arc length (Ref. 19).

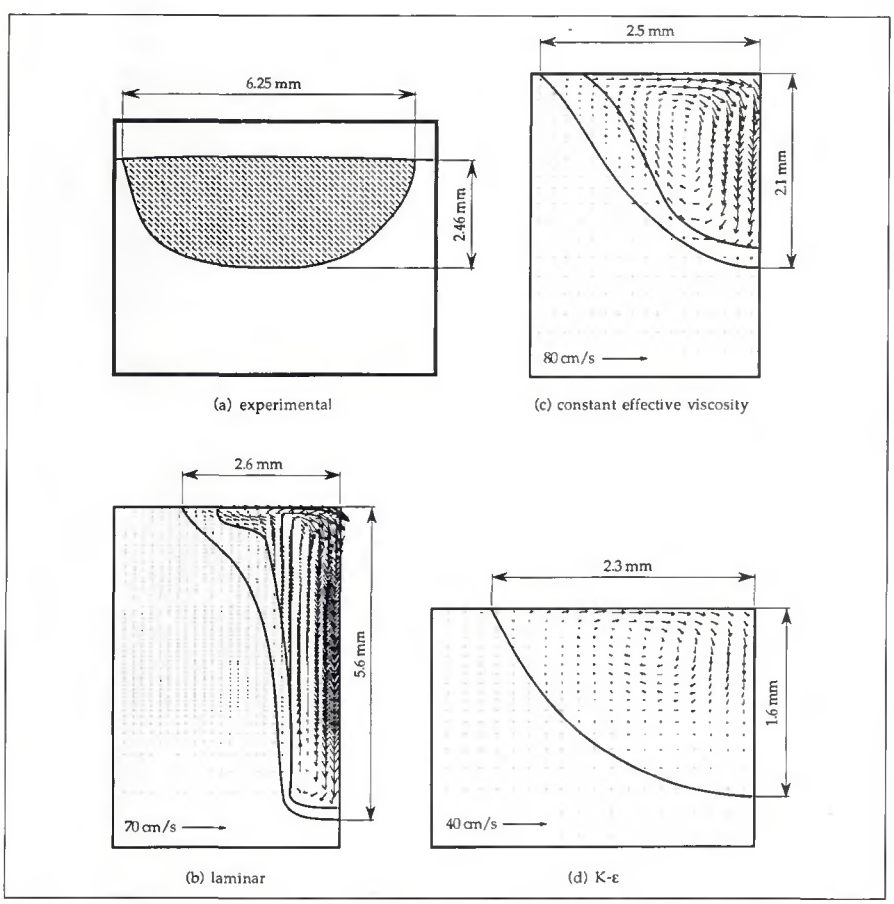

Fig. 7 — Comparison of weld pool shapes for: A — experimental results (Ref. 13); B — numerical results based on laminar properties; C — numerical results using a constant effective viscosity and thermal conductivity (30X molecular in liquid phase. Physical properties in the solid metal is given by Fig. 5); D — numerical results based on the K-ε turbulence model for 100 A.

representation of the welding arc and the weld pool. The important finding was that the assumption of laminar flow within the pool gave pool shapes that were totally inconsistent with the measurements.

Upon postulating mildly turbulent flow behavior, either by assigning, say, a 30-fold increase to the viscosity, or by using the K-ε model of turbulence, we were able to obtain pool profiles that were much closer to those found experimentally. More specifically, the postulate of (even mildly) turbulent behavior will cause the pool to be much broader (perhaps approaching a hemispherical shape) and will also result in a much more uniform temperature field within the pool. In particular, turbulent or transitional flow will tend to reduce the maximum values of the free surface temperature because of the more effective thermal transport within the system.

Figures 11 and 12 were meant to be the consistency checks on the two turbulence models. Our analyses began by first assigning a constant effective viscosity and thermal conductivity to the system, as shown in Fig. 12, where those values changed from two to 50 times the molecular value. At the same time, the K-ε model was employed to calculate the pool shape. It is reassuring to see that the order of magnitude of the effective viscosity as calculated by the K-ε model (Fig. 11) is comparable to that due to the constant effective viscosity model (Fig. 12) for the same weld pool shape (that is,hemispherical) to be realized. This comparison ensured that the simulation using the K-ε model was consistent. Furthermore, the weld pool shapes so calculated (Figs. 7–9) are in agreement with the experimental results, thus, supporting the notion of turbulent flows in the weld pool.

Implicit in the definition of effective viscosity is that it is spatially dependent. Therefore, the value of 30 times the effective viscosity is used as a representative of the level of turbulence encountered in the weld pool. We have used this value for most of our discussions in the text. Also, we have identified this value to be mildly turbulent if not transitional. A highly turbulent system would be one found in an induction furnace where the effective viscosity could be 100 to 1000 times the atomic value.

The implications of this finding to the modeling of weld pool behavior are thought to be quite significant, because all the previously reported modeling efforts, postulating laminar behavior will have to be critically re-examined. The present work has to be regarded as a first tentative step in this direction. The critical issue that needs to be resolved is the determination of the transition from laminar to turbulent flow, in which case the Reynolds number must be calculated.

For the 100-A arc (Fig. 2) and using the characteristic dimension and velocity corresponding to the pool depth (5.6 mm) and maximum calculated velocity (70 cm/s), respectively, the Reynolds number is about 4700. Flow in this Reynolds number range is definitely turbulent, thus, the laminar range is probably much lower. It is recommended that the laminar range be determined from experimental studies through monitoring the range of velocity fluctuations, which should be very small for laminar flows.

Although the results reported here showed vastly different pool shapes between the laminar and turbulent cases, studies by Paul and DebRoy (Ref. 23) in laser welding give well-rounded pool shapes for both positive and negative constant surface tension coefficients, $\partial\gamma/\partial T$, using laminar flow properties. There are several differences between their studies and our findings: 1) the laser heat flux distribution is planar, thus, the strongest Marangoni flows probably occur outside the beam radius in contrast with arc welding, which occurs over the entire pool surface; 2) the pool dimensions in laser welding (Ref. 23) are an order of magnitude smaller (0.2-mm radius in a 500-W laser weld vs. 3.2-mm-radius in a 100-A arc weld) even though the velocity magnitude is about the same, thus, flow is probably laminar in the laser welded pool; 3) flows in the laser weld pools are predominantly surface tension driven, but in gas tungsten arc welding, there is an additional Lorentz force, which tends to produce deep penetrations; and 4) a constant $\partial\gamma/\partial T$ term is employed in the laser welding studies (the workpiece is pure Fe) (Ref. 23); whereas, the more appropriate model for the $\partial\gamma/\partial T$ term, which is employed in this study, is the Sahoo, *et al.*, model (Ref. 24). This model gives high negative $\partial\gamma/\partial T$ values when the surface temperature exceeds a critical value (2200 K in this case) for a specific sulfur content in the workpiece. Below this critical temperature, the $\partial\gamma/\partial T$ value is positive and a deep pool results. In summary, whether the flow is laminar or turbulent and whether a deep or shal low pool is obtained have a lot to do with the type of heat flux, welding operations (laser vs. arc welds), process parameters and the metal to be welded.

Conclusion

Two turbulence models, the constant effective viscosity and the K-ε models, have been employed to simulate the heat and fluid flow behavior in a gas tungsten arc weld pool. It was found that they provided better comparison with experimental results in terms of the weld pool shape in contrast to the laminar flow model. The typical effective viscosity in

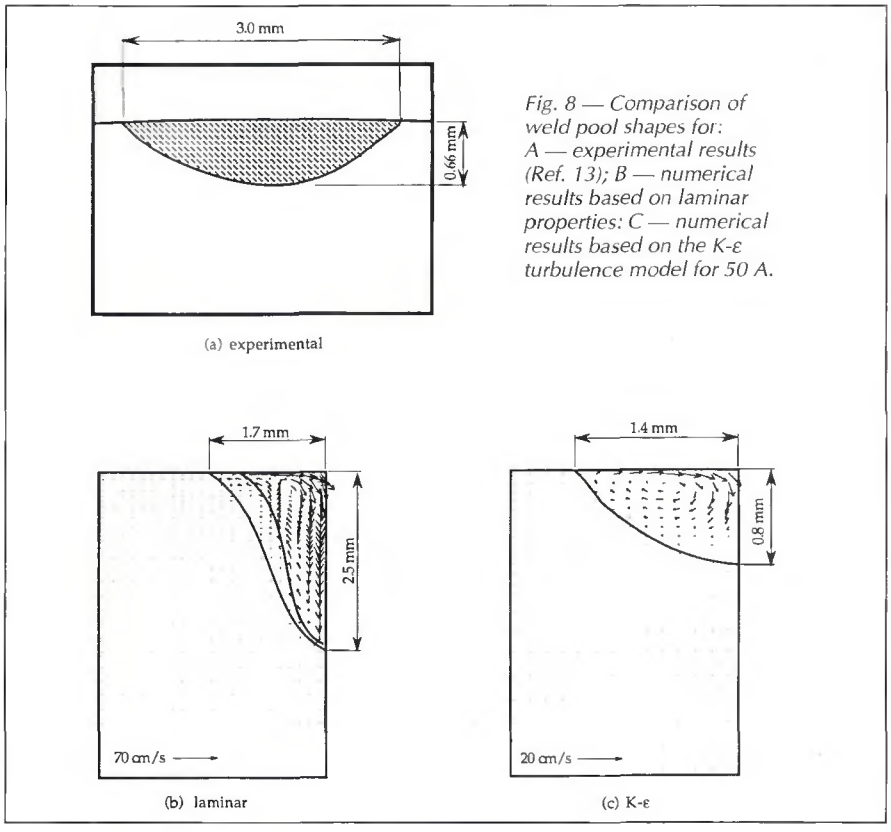

Fig. 8 — Comparison of weld pool shapes for: A — experimental results (Ref. 13); B — numerical results based on laminar properties: C — numerical results based on the K-ε turbulence model for 50 A.

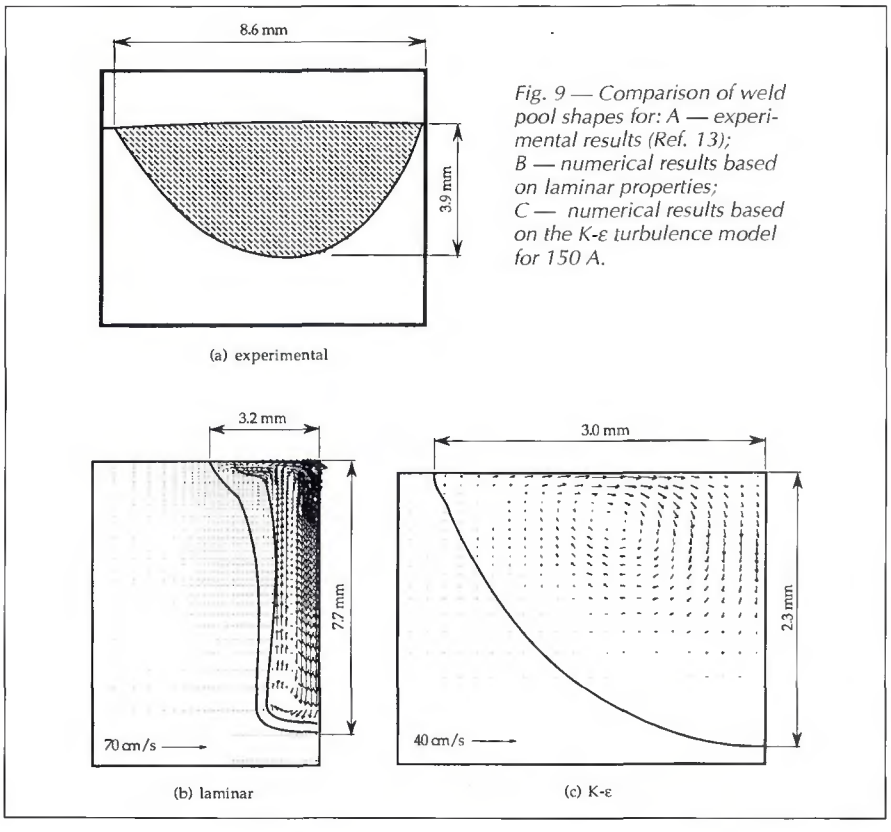

Fig. 9 — Comparison of weld pool shapes for: A — experimental results (Ref. 13); B — numerical results based on laminar properties; C — numerical results based on the K-ε turbulence model for 150 A.

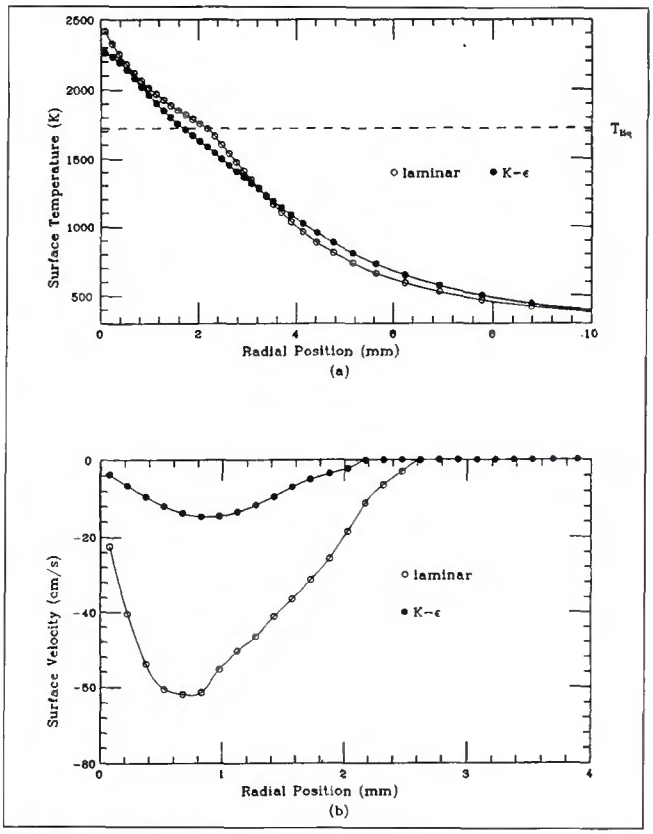

Fig. 10 — Plots of A — surface temperature; B — surface velocity for a 100-A arc and comparing the K-ε model to the laminar flow calculations. T_{liq} is the liquidus temperature of steel (1723 K).

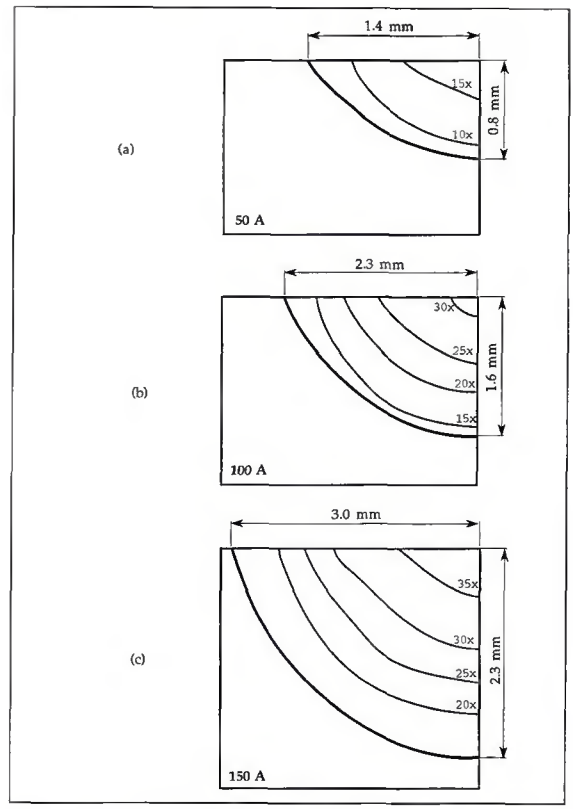

Fig. 11 — Contour plots of effective viscosity as calculated from the K-ε model. The numbers on the contour lines represent the ratio μ_{eff}/μ. The bolder line shows the location of the solid-liquid interface. A — 50 A; B — 100 A; C — 150 A.

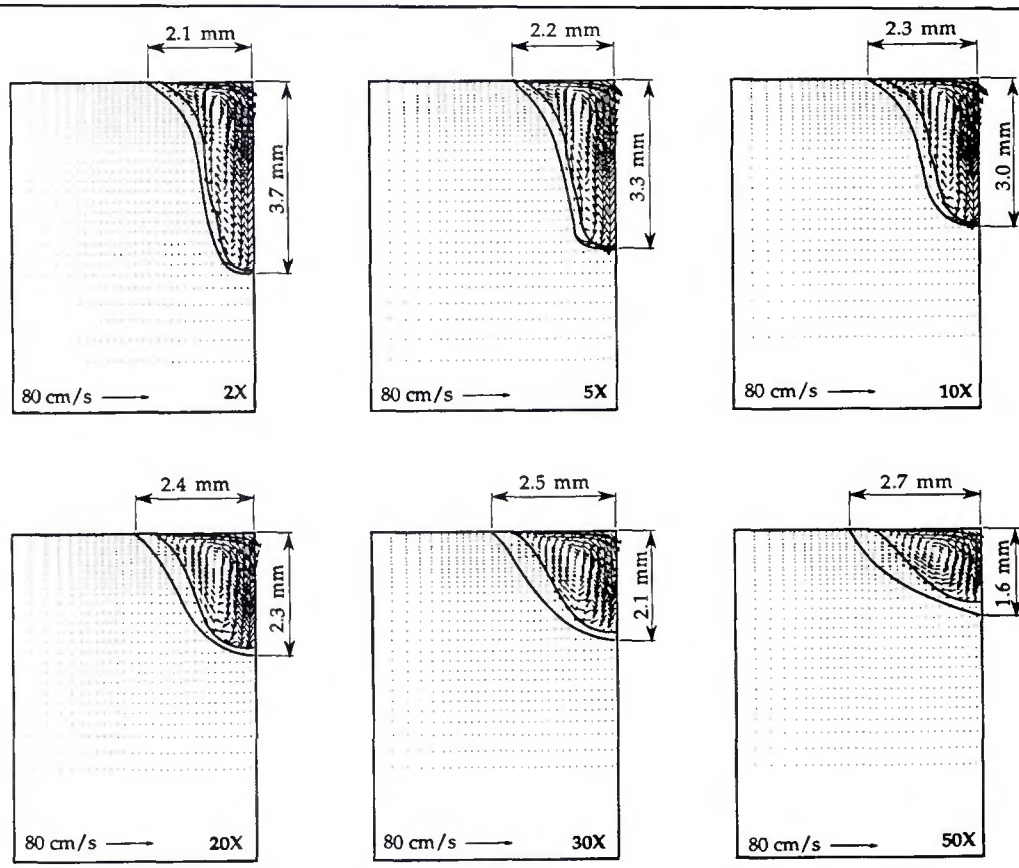

Fig. 12 — Velocity profile and weld pool shape with the effective viscosity as the parameter. The numbers on the contour lines represent the ratio μ_{eff}/μ. Variable physical properties are employed in the solid phase as given by Fig. 5. A — 2X laminar: u_{max} = 69 cm/s: T_{max} = 2568 K; B — 5X laminar: u_{max} = 80 cm/s : T_{max} = 2400 K; C — 10X laminar: u_{max} = 77 cm/s: T_{max} = 2350 K; D — 20X laminar: u_{max} = 68 cm/s : T_{max} = 2290 K; E — 30X laminar: u_{max} = 60 cm/s : T_{max} = 2242 K; F — 50X laminar: u_{max} = 43 cm/s: T_{max} = 2177 K.

the weld pool for the 50- to 150-A arc currents is of the order of 20 to 35 times the molecular value. The typical Reynolds number encountered when flow is turbulent is about 4700.

Acknowledgments

The authors wish to thank the U.S. Department of Energy, Basic Energy Sciences Section, for financial support of this investigation under Grant No. DE-FG02-87ER45289. The use of the Apollo DN 10000 computer, which has been donated by Apollo Computer Inc. to M.I.T. Materials Processing Center is gratefully acknowledged. Partial support of this project is also provided by Office of Naval Research under contract No. N00014-89-J-3185.

References

1. Shercliff, J. A. 1970. Fluid flow motions due to an electric current source. *J. Fluid Mech.* 40: 241–250.

2. Oreper, G. M., Eagar, T. W., and Szekely, J. 1983. Convection in arc weld pool. *Welding Journal* 62: 307-s to 312-s.

3. Oreper, G. M., and Szekely, J. 1987. A comprehensive representation of transient weld pool development in spot welding. *Met. Trans. A* 18A, 1325–1332.

4. Zacharia, T., Eraslan, A. H., Aidun, D., and David, S. A. 1989. Three-dimensional, transient model for arc welding process. *Met. Trans. B* 20B, pp. 645–659.

5. Zacharia, T., David, S. A., Vitek, J. M., and DebRoy, T. 1989. Weld pool development during GTA and laser welding of type 304 stainless steel, Part I — Theoretical analysis. *Welding Journal* 68: 499-s to 509-s.

6. Zacharia, T., David, S. A., Vitek, J. M., and DebRoy, T. 1989. Weld pool development during GTA and laser welding of Type 304 stainless steel, Part II - Experimental correlation. *Welding Journal* 68: 510-s to 519-s.

7. Kou, S., and Wang, Y. H. 1986. Weld pool convection and its effects. *Welding Journal* 65: 63-s to 70-s.

8. Thompson, M. E., and Szekely, J. 1987. The transient behavior of weld pools with a deformed free surface. *Int. J. Heat and Mass Transfer* 32: 1007–1020.

9. Rappaz, M., David, S. A., Vitek, J. M., and Boatner, L. A. 1990. Analysis of microstructural development in single crystal welds. *Recent Trends in Welding Science and Technology*, S. A. David and J. M. Vitek eds., ASM International, Materials Park, Ohio, pp. 147–151.

10. Choo, R. T. C., Szekely, J., and Westhoff, R. C. 1990. Modeling of high currents arcs in welding with emphasis on free surface phenomena in weld pool. *Welding Journal* 69: 346-s to 361-s.

11. Malinowski-Brodnicka, M., den Ouden, G., and Vink, W. J. P. 1990. Effect of electromagnetic stirring on GTA welds in austenitic stainless steel. *Welding Journal* 69: 52-s to 59-s.

12. Kou, S. 1987. *Welding Metallurgy*. John Wiley, New York, N.Y., p. 35.

13. Zacharia, T., David, S. A., Vitek, J. M. and Kraus, H. G.1990. Computational modeling of stationary GTA weld pools and comparison to stainless steel 304 experimental results. *Met. Trans. B*. 22B, pp. 243–257.

14. Choo, R. T. C., Szekely, J., and Westhoff, R. C. 1992. On the calculations of the free surface temperature of GTA weld pools from first principles: Part 2 Modeling the weld pool and comparison with experiments. *Met. Trans. B*. 23B, pp. 371–384.

15. Tate-Patterson, G. S., and Orszag, S. A. 1971. *Phys. of Fluid*. 14: 2538–2541.

16. Riley, J. J., and Metcalf, R. W. 1980. AAIJ Paper No. 80-0274, Pasadena, Calif.

17. Launder, B. E., and Spalding, B. D. 1972. *Mathematical Models of Turbulence*. Academic Press, New York, N.Y.

18. Choo, R. T. C., and Szekely, J. 1992. Vaporization kinetics and surface temperature in a mutually coupled gas tungsten arc welding and weld pool. *Welding Journal* 71: 77-s to 93-s.

19. Choo, R. T. C., Szekely, J., and Westhoff, R. C. 1992. On the calculations of the free surface temperature of GTA weld pools from first principles : Part I Modeling the welding arc. *Met. Trans. B*. 23B, pp. 357–369.

20. Choo, R. T. C., and Szekely, J. 1991. The effect of gas shear stress on Marangoni flows in arc welding. *Welding Journal* 70: 223-s to 233-s.

21. Touloukian, Y. S. 1967. *Thermophysical Properties of High Temperature Solid Materials Vol. 3: Ferrous Alloys*. McMillan Co., New York, N.Y.

22. Spalding, D. B. 1981. *J. Mathematics and Computers in Simulation* XIII, p. 267.

23. Paul, A. and DebRoy, T. 1988. Free surface flow and heat transfer in conduction mode laser welding. *Met. Trans. B.*, 19B, pp. 851–858.

24. Sahoo, P., DebRoy, T., and McNallan, M. T. 1988. Surface tension of binary metal surface active solute systems under conditions relevant to welding metallurgy. *Met. Trans. B*. 19B, pp. 483–491.

CHARACTERIZATION OF PWHT BEHAVIOR OF 500 N/mm² CLASS TMCP STEELS

The objective of this research project was to clarify the effects of PWHT conditions on the properties of TMCP steel in comparison with conventional heat-treated steel. A study on the possibility of eliminating PWHT with TMCP steels was the main subject of this cooperative research.

This report was prepared by the Subcommittee on Pressure Vessel Steels of the Materials Division of the Japan Pressure Vessel Research Council

Publication of this report was sponsored by the Pressure Vessel Research Council of the Welding Research Council, Inc.

The price of WRC ***Bulletin 371 (April 1992)*** is $40.00 per copy, plus $5.00 for U.S. and Canada, or $10.00 for overseas, postage and handling. Orders should be sent with payment to the Welding Research Council, Inc. • 345 E. 47th St. • Room 1301 • New York, NY 10017 • (212) 705-7956.