Changes in the Interface Structure and Strength of Diffusion Brazed Joints of Al-Si System Alloy Castings

The diffusion brazing process passes the test for joining aluminum castings

BY T. OSAWA

ABSTRACT. The diffusion brazing process, which utilizes diffusion between the base metal and the filler metal, has been tried for joining Al-Si alloy castings. If a ternary eutectic Al-Cu-Si alloy system with a lower melting point than the Al-Si system base metal is produced at the braze interface by the diffusion reaction between the base metal and the copper filler metal, it may be possible to join an Al-Si system alloy casting by the diffusion brazing process, using a ternary eutectic Al-Si-Cu alloy as a filler metal. In this experiment both copper and brass materials were used as preforms.

It was clarified that the diffusion brazing process with a copper or brass preform could be used for all hypoeutectic, eutectic and hypereutectic alloys of Al-Si system castings, and that the minimum temperature where the braze interface showed a liquid phase structure was 530°C for the copper preform and 510°C for the brass preform. The shear strength of the diffusion brazed joint was dependent on the chemical compositions of the base metal, the type of material for the preform, and brazing temperature and time. The maximum strength of the diffusion brazed joint under optimum conditions was 130 to 150 MPa for the base metal of both Al-7Si and Al-12Si alloy castings and 100 to 130 MPa for the base metal of Al-20Si alloy casting. The effect of brazing time on the strength of the brazed joint varied depending on the type of preform. The strength of the joint with the copper preform is determined by the characteristics of the braze interface structure. With the brass preform, the strength is controlled by the growth of silicon grains in the braze interface structure.

T. OSAWA is with Aoyamagakuin University, College of Science and Technology, Tokyo, Japan.

Introduction

It has become comparatively easy to braze aluminum and its wrought alloys due to the recent developments in technology such as vacuum brazing and atmosphere controlled brazing. The understanding of the brazing mechanism has also become considerably clearer (Refs. 1, 2).

On the contrary, it is extremely difficult to braze an aluminum alloy casting, and it is only possible, with difficulty, to do so by the ultrasonic or rub soldering methods. The reason why it is difficult to braze an aluminum alloy casting as compared to a wrought aluminum alloy is because the base metal of the casting is easily eroded with a molten brazing filler metal and wetting is less with the casting (Ref. 3). The purpose of this research on the diffusion brazing of an Al-Si system alloy casting was to investigate the relationship between the brazing conditions and the brazed interface structure or the strength of the brazed joint.

KEY WORDS

Al-Si Alloy Casting
Diffusion Brazing
Base Metal
Preform
Copper
Joint Strength
Strength Change
Braze Interface
Brazing Temperature
Brazing Time

The principle of the diffusion brazing process is to braze the base metal with a low melting point, eutectic alloy filler metal that is produced from the diffusion reaction between the base metal and a preform. This process is different from the conventional brazing method because of the wetting of the base metal surface with molten brazing filler metal (Refs. 4, 5). Now, if the Al-Si system alloy casting is diffusion brazed with a copper preform, it is presumed that the ternary eutectic alloy of the Al-Si-Cu system is formed. Niemann and Wille made a study of diffusion brazing an Al-Si casting alloy with electroplated copper. Their study was from the point of view of a practical application rather than an investigation into the basics of the phenomenon (Ref. 6).

According to the ternary equilibrium diagram of the Al-Cu-Si system (Ref. 7), there is the ternary eutectic of Al-27Cu-5Si formed in this system with a eutectic temperature of 525°C (975°F). This temperature is lower than the melting point of the Al-Si alloy casting so that if this eutectic alloy can be obtained by the diffusion reaction, copper may be used as a preform for the diffusion brazing of an Al-Si system alloy casting. Therefore, both copper and brass materials were used as preforms in this experiment. The reason for using both copper and brass as preforms was that some specific changes in brazing temperature, structure at the diffusion braze interface, and strength of the diffusion brazed joint were expected to

occur with the presence of zinc at the braze interface.

Test Piece and Experimental Procedure

The aluminum alloy casting systems used for this investigation were Al-7Si hypoeutectic, Al-12Si eutectic and Al-20Si hypereutectic as shown in Table 1. The test pieces used for the observation of the braze interface structure were disks of 15 x 3 mm (0.6 x 0.12 in.) machined from aluminum alloy rods cast in the size of 20 x 150 mm (0.8 x 6 in.). For testing braze joint strength, test pieces of 10 x 20 x 5 mm (0.4 x 0.8 x 0.2 in.) were machined from an aluminum alloy, which had been cast in the size of 15 x 25 x 150 mm (0.6 x 1 x 6 in.). None of the aluminum alloy castings was specially treated for modification. Foils of both pure copper (JIS DCuP1) and brass (JIS BsP1), 50-μm thick, were used for the preforms.

To prepare for diffusion brazing, the surfaces of the test pieces were polished with emery paper No. 2 and washed with the ultrasonic cleaning method for degreasing with trichloroethylene. Two test plates were fastened by a jig with a preform between them and then heated in a tubular furnace with a hydrogen atmosphere. The test pieces were fastened in a jig with the torque force of 2.9 Nm. The dew point of the hydrogen gas was –40° to –4°C (–40° to 25°F). The brazing temperature was 500°–540° ±2°C (932°–1004° ±3.8°F) for a brazing time of 2 to 30 min. Although the hydrogen gas does not reduce the oxide film of the Al-Si system at this experimental temperature, it was obvious that the hydrogen atmosphere produced a ternary or quaternary eutectic alloy in the molten state that was more wettable on the base metal of the Al-Si casting than other brazing atmospheres such as nitrogen or argon. This is the reason hydrogen gas was used as the brazing atmosphere. The center of the brazed test piece was cut at a right angle for both microscopic examination and EPMA analysis. The lap joint schematically shown in Fig. 1 was used for the strength test of the diffusion brazed joint. The shear strength was tested by compression load with the jig as shown in Fig. 2.

Experimental Results and Discussion

Reaction between Al-Si System Alloy Casting and Copper

The type of diffusion reaction between the Al-Si system alloy casting and the preform naturally varies depending on its temperature. Figure 3 shows the microstructures of the braze interface resulting from the diffusion reaction between Al-12Si and copper. In the case where the brazing temperature is 520°C (968°F), which is lower than the ternary eutectic temperature of the Al-Cu-Si system alloy, an alloy layer consisting of a Cu-Al intermetallic compound is noticed at the interface between the base metal and the copper. It is surmised that only solid diffusion must be taking place. However, in the case where the brazing temperature is 530°C (986°F), which is higher than the ternary eutectic point, the liquid phase structure caused by both of them (*i.e.*, the presence of the Al-Cu-Si system eutectic alloy) can be recognized from the metallography. Moreover, something similar to a black band seen at the boundary between the Al-Si alloy casting and copper in Fig. 3 is the marker (mica foil) inserted before diffusion brazing to indicate the boundary .

As described above, the braze interface shows the liquid phase structure under the proper brazing condition, and there is no inferiority in the fluidity of molten brazing filler metal and the braze interface structure as compared with that of a conventional brazing process. Here, the "liquid phase structure" means the solidified structure of the alloy with a low melting point, which has been produced in the diffusion brazing process, turned into the liquid phase (liquid state) at the interface, and cooled down after the completion of brazing.

Thus, the diffusion brazing process seems to be a very useful means to braze this base metal, which is difficult to wet with other molten brazing filler metals.

Structure of the Braze Interface

From the standpoint of brazeability and braze joint

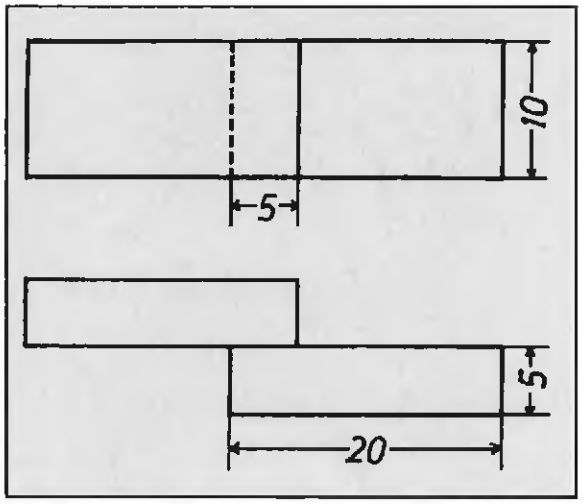

Fig. 1 — Dimensions of the specimen used for the test of joint brazed strength (mm).

Table 1 — Chemical Composition of Prepared Al-Si Alloy Castings

Alloy Casting	Composition (wt-%) Si	Al
Al-7%Si	7.12 ± 0.05	bal.
Al-12%Si	11.16 ± 0.08	bal.
Al-20%Si	20.92 ± 0.14	bal.

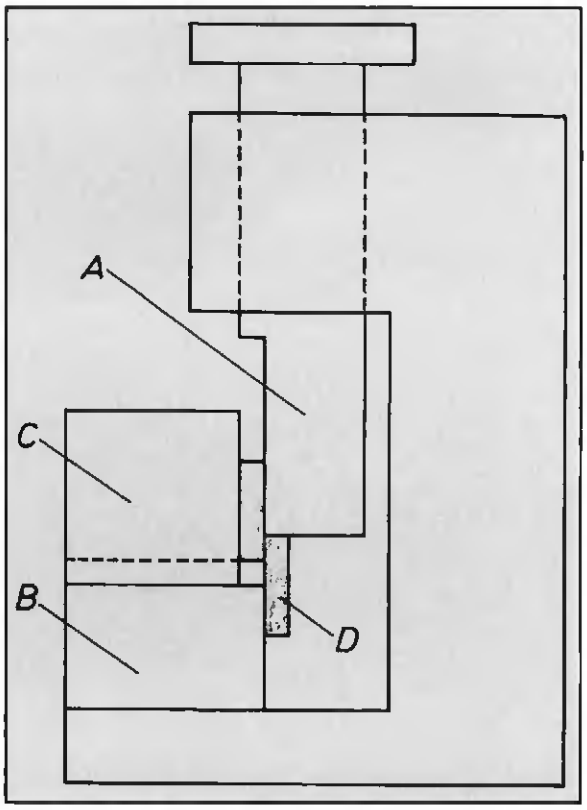

Fig. 2 — Jig used for the shear strength test of the diffusion brazed joints.

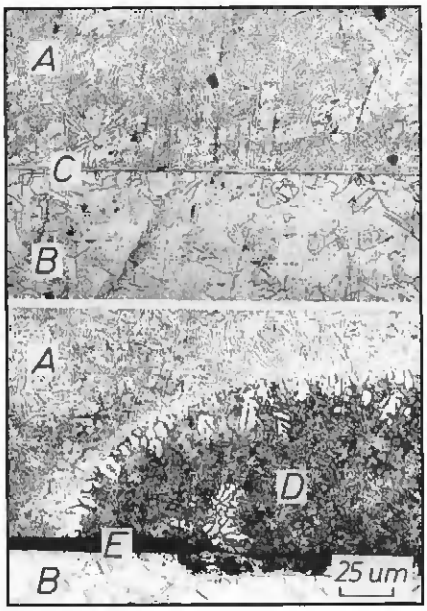

Fig. 3 — Microstructures of the diffusion brazed Al-Si alloy casting with a copper preform brazed at 520°C (top) and 530°C (bottom) for two min. A — Al-12Si alloy casting; B — copper preform; C — alloy layer; D — ternary eutectic Al-Si-Cu alloy system; E — mica foil marking the interface between Al-Si alloy casting and copper preform.

strength, it is important in the diffusion brazing process that the braze interface has a liquid phase structure. Therefore, based on the interface structure of the test pieces diffusion brazed under various conditions, the relationship between the brazing time and the temperature at which the liquid phase structure between the preform and Al-Si alloy casting is formed was investigated. Figure 4 shows the results of this where preforms of both copper and brass were used. In Fig. 4, the symbols ● and ▼ indicate that the remainder of both copper or brass from the preform can be microscopically noticed at the joint. The symbols O and ∇ indicate that it thoroughly disappears, and the complete liquid phase structure can be noticed. The symbol ∅ indicates that the liquid phase structure can partly be noticed, but the copper preform still exists. Respective curves show the lowest temperature for the liquid phase structure. As the ternary eutectic temperature for Al-Cu-Si system alloy is 525°C (977°F) when copper is the preform, the complete liquid phase structure is not noticed at the brazing temperature of 570°C (1058°F). In the case where brass is used for the preform, the lowest temperature for the liquid phase structure is about 510°C (950°F), which is 15°C lower than in the case of copper. The reason for this is thought to be that the eutectic temperature drops due to the existence of zinc. In other words, although the existence of the quaternary eutectic alloy of Al-Cu-Si-Zn system is not obvious, it seems to be due to the formation of the liquid phase of Al-Cu-Zn system ternary eutectic alloy (Ref. 8), prior to the formation of the ternary eutectic alloy of the Al-Cu-Si system.

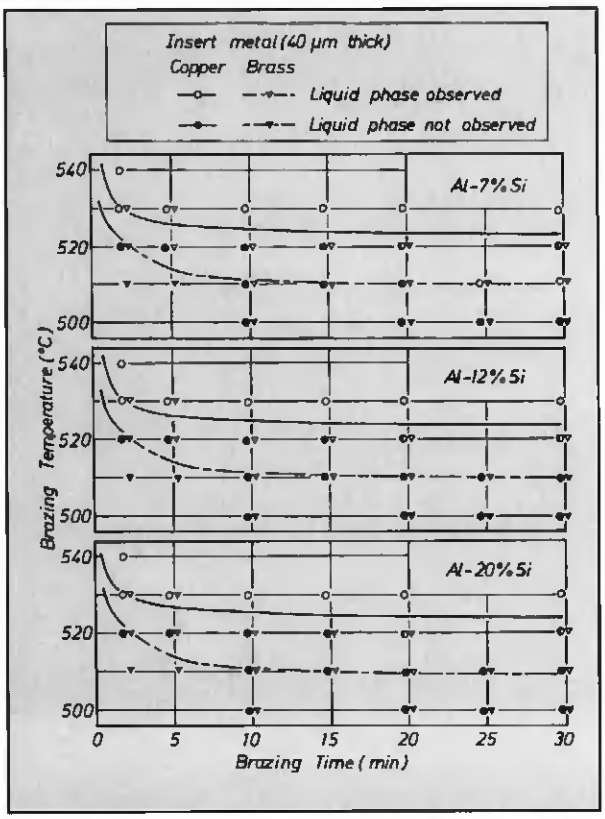

Fig. 4 — Effects of heating time and temperature on the formation of the liquid phase between Al-Si castings and copper or brass preforms.

Figure 5 shows the microstructures of the braze interface in the respective base metals of the Al-Si alloy casting with the different copper and brass preform materials. In the case where the brazing temperature is 500°C (932°F), the liquid phase structure does not appear at the brazing interface of any base metal regardless of type of preforms, and only the existence of an alloy layer is microscopically noticed between the base metal and the preform. In this case, it can be said to be a simple solid phase diffusion joint.

In the case where the brazing temperature is 520°C, the interface structure varies depending on the type of preform, and if it is copper, the liquid phase structure does not appear, but only the alloy layer, due to the solid phase diffusion. However, in the case where the preform is brass, the complete liquid phase structure appears at the brazing interface, which is wholly the same as the interface structure produced by the conventional brazing methods. Furthermore, a lot of the silicon grains, which can be seen in the braze interface structure, seem to be excessively segregated at the time of the formation of the quaternary eutectic alloy. This alloy consists of Al-Cu-Si-Zn formed from the mutual diffusion between the base metal and the preform.

In the case where the brazing temperature is 530°C, which is higher than the ternary eutectic temperature of the Al-Cu-Si system, even if the preform is copper, the liquid phase structure appears at the diffusion braze interface. Where brass is used for the preform, the silicon solidifies in the structure in a coarse manner. If the brazing temperature increases further to 540°C, the complete liquid phase structure appears for both copper and brass preforms, and the growth of coarse grains in the latter is especially significant.

Moreover, the amount of silicon content in the base metal does not seem to contribute to the formation of the liquid phase structure, but it seems to rather affect the formation of silicon grains and their distribution, as described later.

Analysis of Diffusion Braze Interface with EPMA

The results of EPMA line analysis of an Al-7Si braze interface are shown in Fig. 6. It is clarified that in the diffusion brazed joint with the copper preform at a brazing temperature of 500°C an alloy layer can be noticed between the base metal and the copper. By comparing the relation between the relative content of the respective compositions and from the binary phase diagram of Al-Cu system alloy (Ref. 9), the formed alloy layer of intermetallic compound seems to consist of θ phase ($CuAl_2$) and δ phase (Cu_3Al_2) from the base metal side. Furthermore, it is concluded from the results of microscopic examination that the alloy layer consists of three layers, and the fine layer, which can be seen between the θ and δ phases, may be the η phase (CuAl). In the case where the preform is brass, it remains at the interface, and the diffusion of zinc into the base metal can be noticed.

In the case where the preform is copper, the alloy layer increases at the braz-

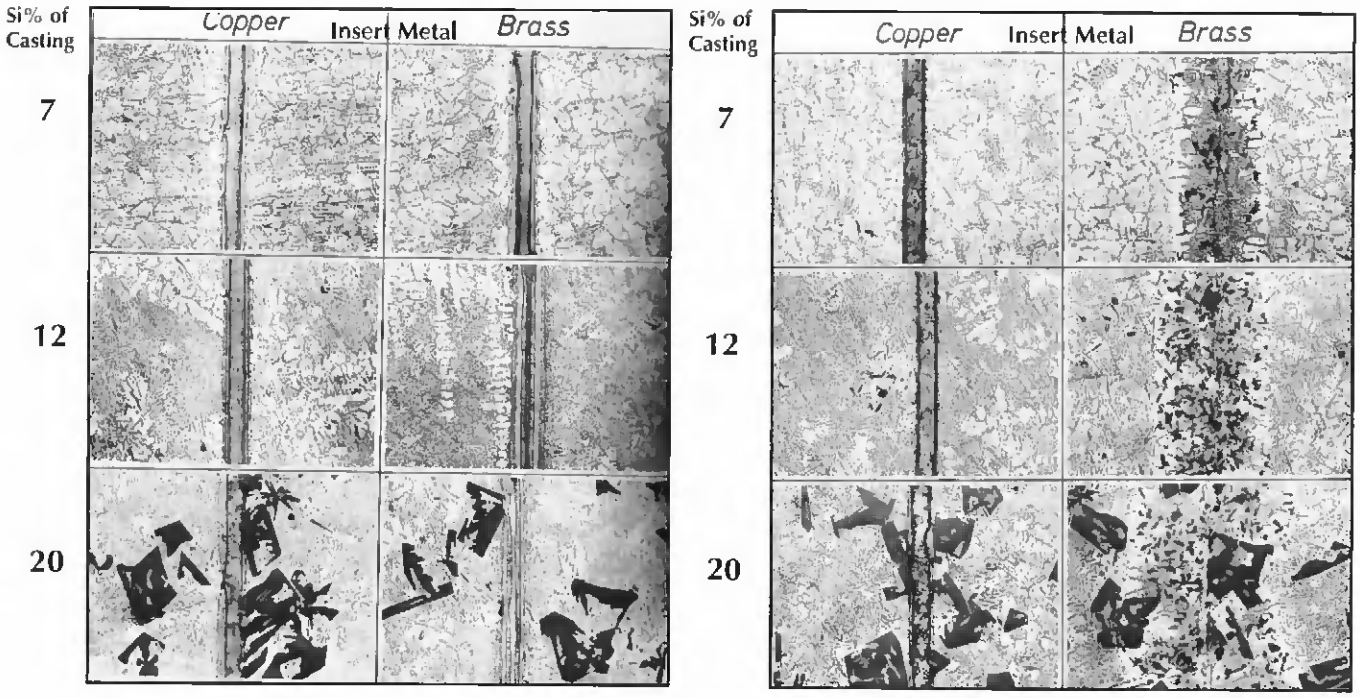

Fig. 5 — Microstructures of the joint interfaces for diffusion brazed Al-Si alloy casting with copper or brass preforms. A — Brazed at 500°C for 30 min; B — brazed at 520°C for 2 min; C — brazed at 530°C for 2 min; D — brazed at 540°C for 2 min.

ing temperature of 520°C. The liquid phase structure can be partly seen, but the copper still exists. In the case where the preform is brass, however, no brass exists, but aluminum, copper, silicon and zinc exist together at the brazing interface, the structure of which is presumed to be a quaternary eutectic alloy of the Al-Cu-Si-Zn system. In other words, it means that the liquid phase has been formed in the brazing process. As shown in Fig. 5, the liquid phase structure, when the preform is copper, is presumed to be a ternary eutectic alloy of the Al-Cu-Si system as well.

Effect of Diffusion Brazing Temperature and Time on the Crystallized Silicon Grain Size

It is reported that the mechanical strength of the hypereutectic Al-Si alloy casting is affected by the size of the primary crystal of the silicon (Refs. 10, 11). Thus, the strength of a diffusion brazed joint seems to be significantly affected by the size and number of silicon grains crystallized at the braze interface when the ternary eutectic Al-Cu-Si alloy is formed.

Figure 7 shows the effect of the brazing time on the number and the average diameter of the primary crystal silicon grain. The measurement was carried out at three central locations, which have been divided equally in vertical sections from the center of the test piece, and the average of their measured results is shown. The number of silicon grains per 50 x 50 mm square were checked using a magnifying power of 200X. The average diameter between the maximum and the minimum was also established.

As shown in Fig. 7, the total number of silicon grains at the braze interface is related to the amount of silicon content in the base metal. It is the largest in the case of the Al-12Si base metal, which consists almost entirely of a eutectic composition. It is assumed the reason for this is that the number of silicon grains crystallized per unit volume (or unit area) depends on the amount of the Al-Si system eutectic composition per unit volume (or unit area) in the base metal. This is because of the solubility limit for the copper or brass preform, which are soluble in the ternary eutectic alloy system of Al-Cu-Si or the quaternary eutectic alloy system of Al-Cu-Si-Zn. That is the reason why the number of crystallized silicon grains is most with the Al-12Si alloy casting.

It is obvious also in Fig. 7 that the effect of brazing time on the diameter of silicon grains depends on the type of preform. Thus, in the diffusion brazed joint with the copper preform, excluding the base metal of Al-20Si alloy casting, the brazing time does not affect the diameter of silicon grains very much. With the brass preform, though, in accordance with the increase of brazing time, the grains grow significantly to be coarse. Furthermore, the diameters of silicon grains in the Al-20Si alloy casting become larger than those in other base metals because the primary crystal silicon existing in the base metal moves partly to the braze interface.

The main reason why the effect of brazing time on the diameter of silicon grains is different between the preforms is assumed to be due to the difference between the diffusion coefficient of the copper preform and the brass preform to the Al-Si system alloy casting. As the diffusion coefficient of the zinc contained in the brass preform to the base metal of Al-Si system alloy casting is presumed to be larger than that of copper, it may ease the formation of the quaternary eutectic alloy system of Al-Cu-Si-Zn. Although the diffusion coefficient of copper or zinc to the Al-Si system casting alloy is not clarified yet, it is recognized that the diffusion coefficient of zinc to aluminum is larger than that of copper (Ref. 12). This may expedite the crystallization of silicon grains by spewing out excessive silicon, and it may promote the disgorging of silicon, copper and aluminum by the preceding diffusion of zinc from the produced quaternary Al-Cu-Si-Zn system alloy to base metal. Thus, the spewed silicon contributes to the growth of silicon-grains, which have already been crystallized at the time of formation of the quaternary eutectic alloy of Al-Cu-Si-Zn system so that the silicon grains grow up to be coarse. Since the process progresses with the increase of brazing timethe longer brazing time seems to be the cause for the growth of silicon grain diameter in the case of the brass preform. Furthermore, the disgorged copper and aluminum seem to grow to be an α phase crystal of the Al-Cu system alloy at the

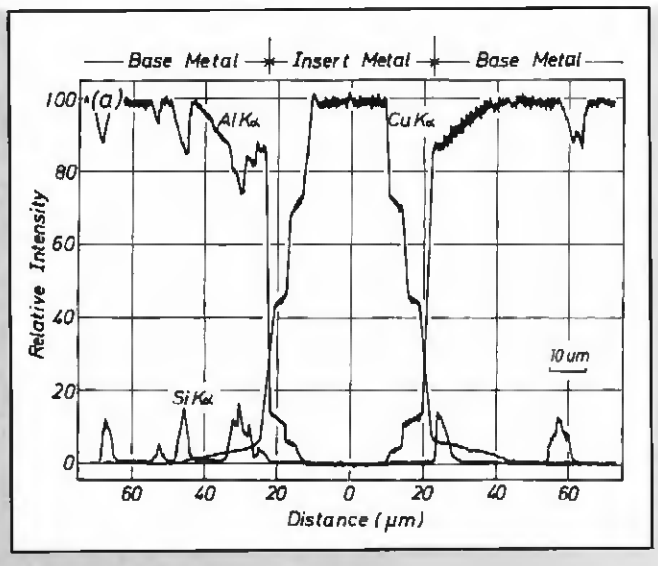

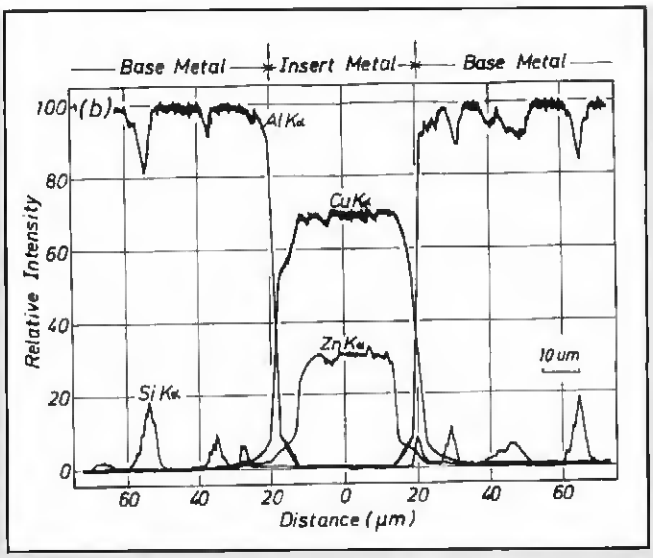

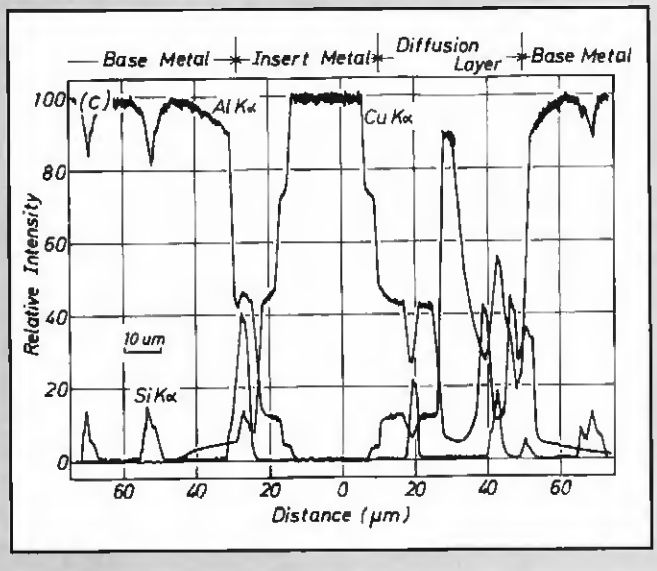

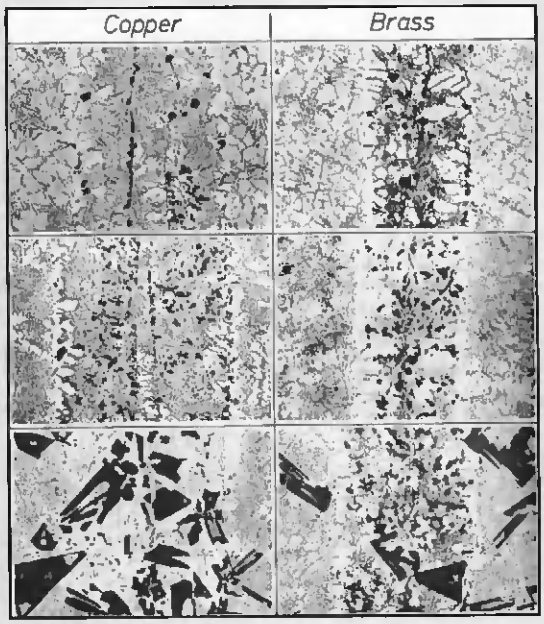

Fig. 6 — EPMA analysis of the diffusion brazed joints for Al-7Si alloy castings. A — Brazed at 500°C for 30 min with a copper preform; B — brazed at 500°C for 30 min with a brass preform; C — brazed at 520°C for 30 min with a copper preform; D — brazed at 520°C for 30 min with a brass preform.

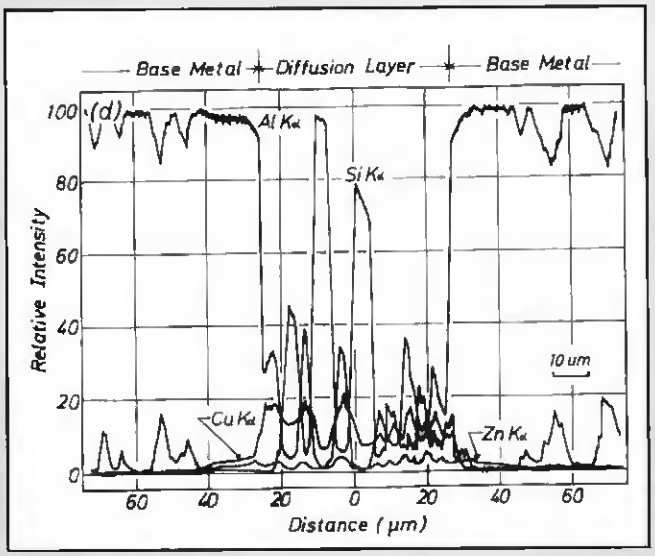

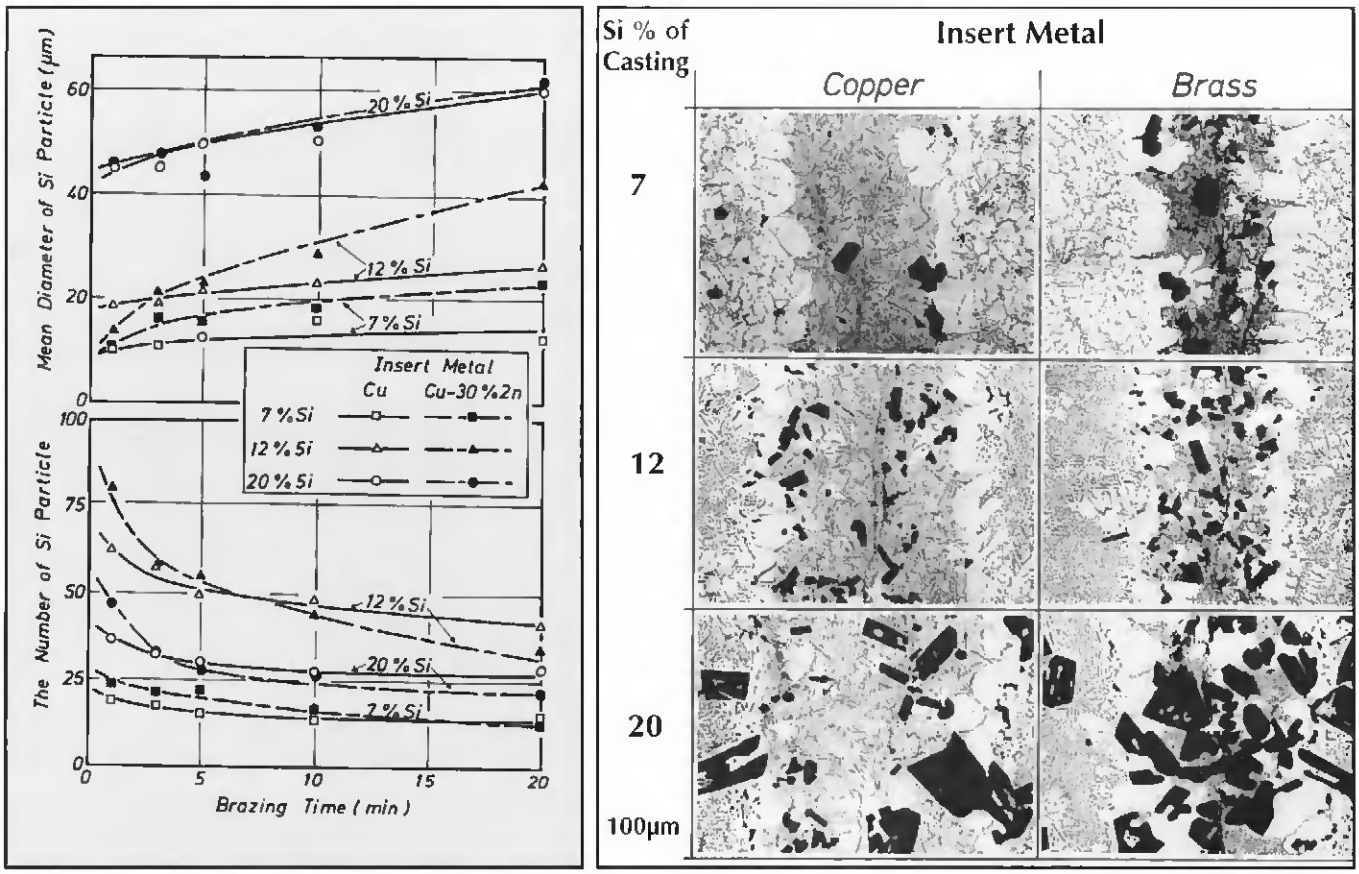

Fig. 7 — The number and mean diameter of Si particles crystallized in the joint interfaces diffusion brazed at 540°C.

braze interface.

Strength of the Diffusion Brazed Joint

Figure 8 shows the effect of brazing temperature and time on the strength of the diffusion brazed joints of various Al-Si system alloy castings. It is obvious from Fig. 8 that the strength of the diffusion brazed joint with the copper preform is almost constant with a brazing temperature of 500°C. This is lower than the ternary eutectic temperature of the Al-Cu-Si system, and this system has a low strength. However, the strength of the joint when diffusion brazed at 530° and 540°C, where the liquid phase of the ternary eutectic Al-Cu-Si alloy system is formed, is higher than that at 500°C where the liquid phase cannot be formed. Moreover, the strength of the brazed joint for all base metals has a tendency to increase with an increase in brazing time, excluding the brazing temperature of 500°C where the increase in strength is greater at the shorter brazing time.

On the other hand, the strength of the joint with the brass preform brazed at 520° and 540°C, where liquid phase must be produced, decreases with the increase of brazing time, excluding the brazing temperature of 500°C. Furthermore, by heating up to 500°C, which is lower than the quaternary eutectic temperature of the Al-Cu-Si-Zn system alloy, the strength of the diffusion brazed joint becomes low and almost constant, regardless of brazing time, which is the same as with the copper preform.

As mentioned above, the effect of brazing time on the strength of the diffusion brazed joint having a liquid phase structure depends on the type of preform material. Two factors that affect the strength of a diffusion brazed joint are 1) the characteristics of the diffusion brazed interface structure and 2) the grain growth of the crystallized silicon grain.

The characteristics of the braze interface may be affected by the dissolution of base metal into a liquid phase during the brazing process, from which the brittle characteristics of the

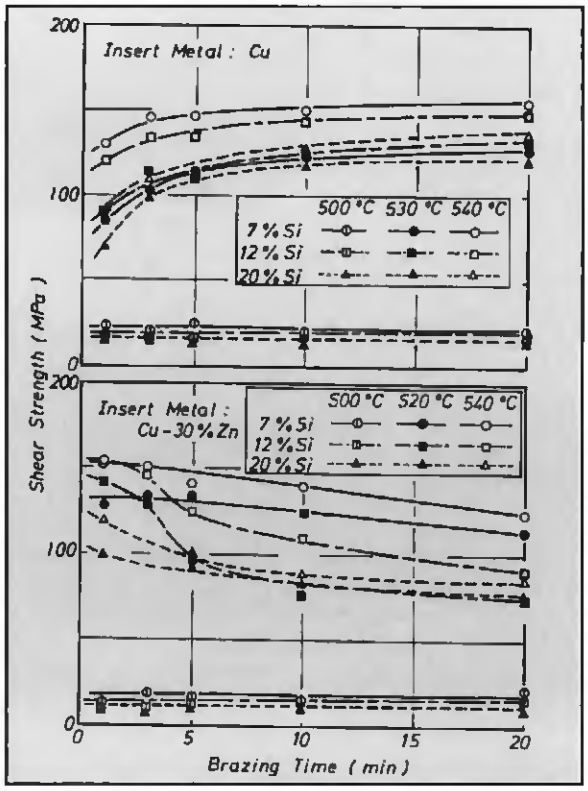

Fig. 8 — Effects of brazing time and temperature on the shear strength of diffusion brazed joints in relation to the types of preforms and Al-Si alloy castings used.

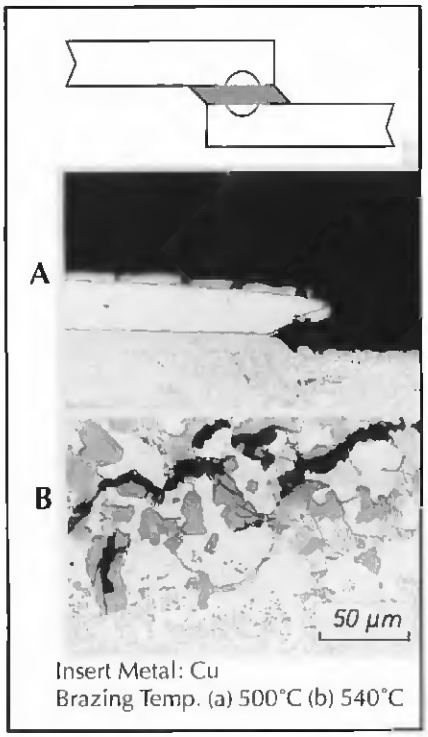

Fig. 9 — Microstructures of ruptured joints. A — Brazed at 500°C with copper insert; B — brazed at 540°C with copper insert.

eutectic alloy may be improved. Therefore, depending on the dissolution of base metal, the strength of the diffusion brazed joint with a copper preform increases with the increase of brazing time and finally reaches the equilibrium strength. On the other hand, the strength of the diffusion brazed joint with a brass preform seems to reach the equilibrium strength in a short time. This probably occurs within two min since the dissolution velocity of the base metal may increase depending on the greater temperature difference between the melting point of the liquid phase and the brazing temperature compared to the copper preform. Then, the hardness of the diffusion braze interface of the Al-12Si base metal joined with a copper preform at 530°C is HV 170 to 220 for the brazing time of two min and HV 130 to 180 for the brazing time of 30 min. The hardness of the diffusion braze interface structure of Al-12Si alloy brazed with the brass preform at 520°C is HV 220 to 225 for the brazing time of two min and HV 210 to 220 for the brazing time of 30 min. The above means that the strength of the diffusion brazed joint is affected by the characteristics of the braze interface, that is, by the variation in hardness caused by the dissolution of base metal into the liquid phase.

As for the effect of silicon grain size on the strength of the diffusion brazed joint with the copper preform, there seems to be little effect since the size of the crystallized silicon grain at the diffusion brazed interface is not affected much by the brazing time, as is shown in Fig. 7. The strength of the diffusion brazed joint with the brass preform, however, seems to decrease with the increase of brazing time since the silicon grains grow coarse with the increase of brazing time so that a crack is easily initiated at the interface between the silicon grains and the quaternary eutectic alloy of the Al-Cu-Si-Zn system. The fact that the quaternary eutectic alloy of the Al-Cu-Si-Zn system's liquid phase structure is harder and more brittle than the ternary eutectic alloy of the Al-Cu-Si system is considered to be a reason why the strength of the diffusion brazed joint with the brass preform is affected by the size of crystallized silicon grains.

The maximum strength of the brazed joint under the optimum conditions is 130 to 150 MPa for both Al-7Si and Al-12Si alloy castings and 100 to 130 MPa for the Al-20Si alloy casting. These values are higher than the 40 to 80 MPa for conventional low-temperature soldered joints of wrought aluminum base material (Ref. 13), but a little lower than 137 MPa for the high-temperature soldering of Al-20Si alloy casting (Ref. 12). One of the reasons for the low strength of diffusion brazed joints of Al-20Si alloy casting is the size of crystallized primary silicon grains at the braze interface, which are produced by base metal erosion and partially exist there.

Figure 9 shows an example of a fracture in the brazed joint and the initiation of the crack near the fracture point. In the case where the brazing temperature is 500°C, the liquid phase is not formed as it is lower than the ternary eutectic temperature of Al-Cu-Si system alloy, thus the copper preform still exists at the brazed joint and the fracture occurs at the interface between the preform and the formed alloy layer. This implies the reason why the strength of the diffusion brazed joint with the copper preform is reduced and shows a constant value regardless of the brazing time. On the other hand, with the joint brazed at 540°C, where the liquid phase is formed, the crack propagates through the crystallized silicon grains. This fact means that a crack is apt to initiate at the interface between the brittle eutectic alloy of liquid phase structure and the hard silicon grains. Therefore, the strength of the brazed joint is significantly affected by the existence of silicon grains, and their number and size must be important factors.

Summary

Regarding the diffusion brazing of an Al-Si system alloy casting, the results of the investigation on the relationship between the variation of brazed interface structure and the strength of the brazed joint are as follows:

1) The diffusion brazing process for an Al-Si system alloy casting with copper or brass preform can apply to all hypoeutectic, eutectic and hypereutectic alloys.

2) The minimum temperature where the diffusion braze interface shows a liquid phase structure is 530°C for the copper preform and 510°C for the brass preform.

3) The shear strength of a diffusion brazed joint depends on the chemical composition of the base metal, the material of preform, and brazing temperature and time. The maximum strengths for diffusion brazed joints under the optimum conditions are 130 to 150 MPa for both Al-7Si and Al-12Si alloy castings and 100 to 130 MPa for the Al-20Si alloy casting.

4) The effect of brazing time on the strength of a diffusion brazed joint varies depending on the type of material for the preform. The strength of the diffusion brazed joint with the copper preform is determined by the characteristics of the brazed interface structure and that with the brass preform is controlled by the growth of silicon grains in the braze interface structure.

References

1. Terrill, J. R., Cochran, C. N., Stokes, J. I., and Haupin, W. E. 1971. Understanding the mechanisms of aluminum brazing. *Welding Journal* 50(12): 833 to 839.

2. Anderson, W. A. 1977. Metallurgical studies of the vacuum brazing of aluminum. *Welding Journal* 56(10): 314-s to 318-s.

3. Van Horn, K. R. 1967. *Aluminum* III, p. 527. ASM International, Materials Park, Ohio.

4. Duvall, D. S., Owczarski, W. A., and Paulonis, D. F. 1974. TLP bonding: a new method for joining heat resistant alloys. *Welding Journal* 53(4): 203 to 214.

5. Peaslee, R. L. 1976. Diffusion brazing. *Welding Journal* 55(8): 695 to 696.

6. Niemann, J. T., and Wille, G. W. 1978. Fluxless diffusion brazing of aluminum castings. *Welding Journal* 57(10): 285-s to 291-s.

7. Mondolfo, L. F. 1976. *Aluminum Alloys*. p. 513, Butterworth & Co. Ltd., London, England.

8. Weisse, E. 1943. JIMMA. 10:244.

9. Hansen, M. 1958. *Constitution of Binary Alloys*. p. 85, McGraw-Hill, New York, N.Y.

10. Sugiyama, M., and Sato, J. 1965. *Casting*. 37(4): 209.

11. Shimizu, Y. 1984. *Light Metal* 34(12): 683.

12. The Japan Institute of Metals. 1984. *Metal Data Book*. pp. 24 to 29, Maruzen, Tokyo, Japan.

13. *Brazing Handbook*. 1967. p. 305, American Welding Society, Miami, Fla.