WELDING RESEARCH

SUPPLEMENT TO THE *WELDING JOURNAL*, JANUARY 1996
Sponsored by the American Welding Society and the Welding Research Council

Developments in Characterization of Resistance Spot Welding of Aluminum

A monitoring system analyzes data and correlates the information to parameters for spot welding aluminum

BY M. HAO, K. A. OSMAN, D. R. BOOMER, AND C. J. NEWTON

ABSTRACT. Automotive industry interest in aluminum is growing rapidly in Europe and North America. Resistance spot welding and weldbonding will be key techniques in the volume production of aluminum vehicles.

A monitoring system has been developed to collect process data during single-phase alternating current (AC) and medium-frequency direct current (MFDC) inverter resistance welding. Features extracted from the captured data are used to characterize spot welding and to identify a range of process phenomena. Statistical analysis has been applied to investigate the relationship between the extracted features and the conventional physical parameters, *e.g.*, weld size and static tensile strength.

Welding trials using both MFDC and AC welding equipment have been carried out using aluminum of different gauges and surface conditions. Results on the Al-Mg alloy AA-5754 have shown that the monitoring methods developed previously for steel do not appear to be generally applicable to aluminum. No single parameter can accurately quantify weld quality. Multiple regression methods can, however, provide good prediction of nugget diameter and static strength. This has proved effective even when only electrical variables are logged, removing the need for measurement of other process signals, e.g., electrode displacement or force.

M. HAO and K. A. OSMAN are with Faculty of Engineering, University of Central England, Birmingham, U.K. D. R. BOOMER is with Alcan Rolled Products Co., Farmington Hills, Mich. C. J. NEWTON is with Alcan International Ltd., Banbury Laboratories, Banbury, U.K.

Introduction

Significance of Aluminum Vehicle Technology

The interest in volume production of aluminum vehicles has been growing rapidly in the last decade. Aluminum has been used in the automotive industry since the 1920s but applications have primarily been in low-volume vehicles and for closure panels. Aluminum has a number of advantages for vehicle applications when compared to steel, particularly with regard to reducing fuel consumption and the consequent reduction of CO_2.

KEY WORDS

Resistance Spot Weld
Aluminum
Automotive
Inverter RW
Monitoring System
Data Acquisition
Electrical Data
Linear Regression
Nugget Diameter
Tensile Strength

The density of aluminum is one-third that of steel. Reductions in mass of body-in-white up to 50% can be achieved while equaling or exceeding the strength and stiffness of comparable steel bodies (Ref. 1). Overall vehicle mass could be reduced by at least 10% and that would reduce fuel consumption by a similar amount (Ref 2). Smaller and more efficient power units could also be fitted to reduce fuel consumption with no loss of vehicle performance and a reduction in the amount of fuel burned (Ref. 1).

Aluminum has a low secondary energy cost. The energy to remelt aluminum is approximately 5% of that required to produce new aluminum and similar material properties can be maintained by recycled aluminum. This makes the recycling of aluminum very attractive (Ref. 1). Further, aluminium and its alloys have good inherent corrosion resistance and need little additional surface protection, unlike mild steel, which must be galvanized.

Many technical issues have to be solved before the use of aluminum becomes commonplace in high-volume production. Resistance spot welding, mechanical fastening, adhesive bonding and weldbonding will be key joining methods and much work is currently underway to address problems experienced with these technologies.

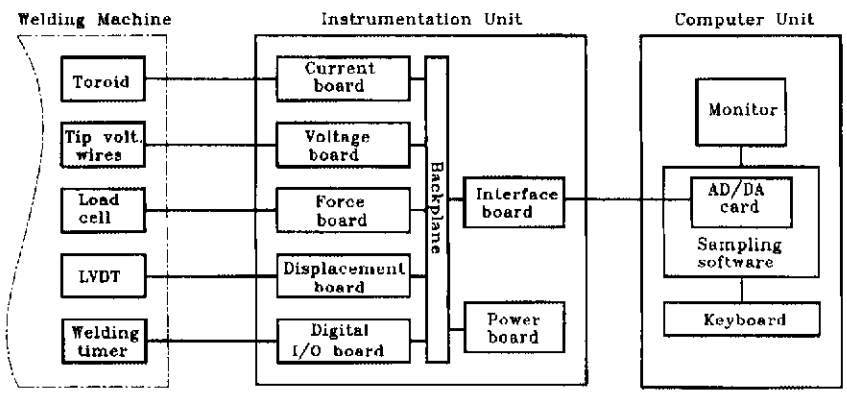

Fig. 1 — Block diagram of aluminum spot welding data acquisition system.

It is worthy of reflection that many of the perceived "problems" in resistance welding of aluminum are often due to the reluctance to accept that spot welding of aluminum requires different practices to steel. This is similar to the initial problems experienced by the automotive industry when zinc-coated steels were first introduced.

Spot Welding of Aluminum

The main advantage of spot welding from a production viewpoint is the high level of productivity that can be achieved and the suitability of the process for automation. The process relies on Joule heating of the components by passing a large current of short duration between the sheets to be joined. Spot welding has been used successfully for many years to join mild steel components. However, the welding practices used for steel must be altered significantly for aluminum due to their differences in physical properties.

Aluminum is a very good electrical conductor with a bulk resistivity one third that of steel. Joule heating is proportional to resistance for a given current. It is understandable that a significant increase in welding current will be required to join aluminum, compared to an equivalent gauge of steel. Thus, unless the equipment for steel has been significantly overspecified, it may not be possible to weld aluminum with existing equipment due to inadequate current rating. Further, aluminum has a high thermal conductivity (which is why it is used for heat sinks) and the localized heat generated by the welding current will be conducted away rapidly. It is therefore necessary to use short weld times, typically in the range 0.04 to 0.16 s.

Aluminum alloys in the as-processed or "mill-finish" condition have a surface oxide layer that varies depending on prior thermal and mechanical processing. The oxide has a high resistivity and a high melting point, around three times greater than pure aluminum. Therefore, welding of aluminum in the as-received condition may be variable (Ref. 3).

Weldbonding

One approach to attain the required structural properties (*e.g.*, stiffness) in vehicle structures is to use weldbonding. This process combines adhesive bonding and spot welding. Adhesive is applied to the faying surface of the joint and the structure is then spot welded to provide part location during curing. The spot welds may also act as "peel-stoppers" under impact loading. Weldbonding can significantly increase the fatigue strength and stiffness of structures compared with just spot welded sheet (Ref. 4).

The adhesive does, however, introduce additional variables to the process due to modification of contact resistance. It is necessary to ensure that adhesive is moved from the weld zone before welding, either mechanically during the presqueeze and squeeze cycles or by using a very low current preweld. Expulsion at the faying surface is likely to become more prevalent unless a suitable weld schedule is used. Expulsions can reduce bond-line strength due to damage to the adhesive layer. This is in contrast to normal practice for welding steel where expulsion is judged, perhaps erroneously, as an indicator that sufficient current was provided and that the weld is "good."

Table 1 — Primary Extracted Features Used for the Analysis

Feature ID	Meaning
V,I,P	rms, voltage, current and power during welding
Energy	Electrical energy delivered during welding
Rxx	Resistance value at each half cycle peak
Rmax	Maximum resistance value (MFDC only)
Rslope	Resistance breakdown slope (MFDC only)
Rfinal	Final resistance value (MFDC only)
Rlast	Resistance value at the last half cycle peak (AC only)
Rmean	Mean resistance of all Rxx over weld
Ddiff	Change in tip displacement between the start and the end of weld
Fmean	Mean electrode force over the weld
Dexpf	Expulsion flag to indicate whether expulsion had happened
Dexp	Expulsion severity

Objectives

This paper describes experiments to characterize the aluminum spot welding process from features that can be readily measured on-line without using intrusive or fragile sensors. The results show that with further work it may be possible to develop on-line quality assurance for aluminum spot welding.

Review of Spot Welding Monitoring and Control Methods

The quality of spot welds should quantify the ability to sustain the design load in the structure under normal service conditions without failure. Mechanical testing directly assesses weld quality by destructive testing of specimens or structures and many forms of testing have been devised.

Destructive testing is, however, not suitable for routine production monitoring, so a range of nondestructive test (NDT) techniques have been developed for spot welding. These include ultrasonic methods, electrical current flow and radiographic methods to name but a few (Refs. 5, 6). In general, nondestructive testing methods have several disadvantages that restrict their application. They are often costly, complex to undertake, difficult to interpret, and are affected by many other factors associated with the process.

In-Process Monitoring

A number of in-process or on-line monitoring techniques have been pro-

posed to allow routine monitoring of weld quality during normal production. These methods cannot measure weld quality directly. Rather, they infer weld quality from one or more parameters measured during the process. These values are compared with references, and the likely weld quality is evaluated. A wide range of methods has been employed including infrared (thermal emission), ultrasonic, acoustic emission, thermal expansion and a number of electrical parameter measurement methods (Refs. 7–19). The latter have involved the monitoring of voltage, energy, or the change of resistance between the welding tips as the nugget is formed (known as dynamic resistance method).

These techniques were developed based on the steel spot welding process. Although some success has been achieved with uncoated steels, experience with coated steel has been less encouraging. For aluminum spot welding, little has been done in terms of process characterization. The need for in-process monitoring of aluminum spot welding is obvious, considering the predicted increase in the commercial utilization of aluminum spot welding.

Data Acquisition System

A data acquisition system has been developed to sample the electrical and mechanical data from the welding process, which was believed to contain the most potentially useful information, namely, voltage (V), current (I), dynamic resistance (DR), electrode displacement (D) and electrode force (F). The data acquisition system consists of two main elements as shown in Fig. 1: the signal conditioning unit to which the transducers are connected, and the data acquisition card housed in a PC that samples the signal output from the conditioning unit. Two different signal conditioning units were developed, one each for AC and MFDC welding. The PC used a commercially available data acquisition card and software package. This permitted data to be collected automatically at the start of welding when suitably interfaced to the welding equipment. Examples of traces collected during MFDC and AC welding can be seen in Fig. 2A and 2B.

Data Analysis and Feature Extraction

A spot welding data analysis package (SWeDAP) has been developed to process the logged data automatically. This allows a number of data files to be batched through the analysis without manual intervention. The features extracted from each weld are written to a range of file types for subsequent analysis and hard copy can be generated as required. SWeDAP was written using an interactive environment software package for scientific and engineering numerical computation. Additional specialized program files were generated using C language to perform tasks such as file format conversion before processing. A diagram of the overall operation of SWeDAP can be seen in Fig. 3.

Up to 274 features are extracted by SWeDAP from each weld data file. The most significant features for this analysis are listed in Table 1. A more detailed description of the data acquisition and analysis system can be found in a previously published paper (Ref. 20).

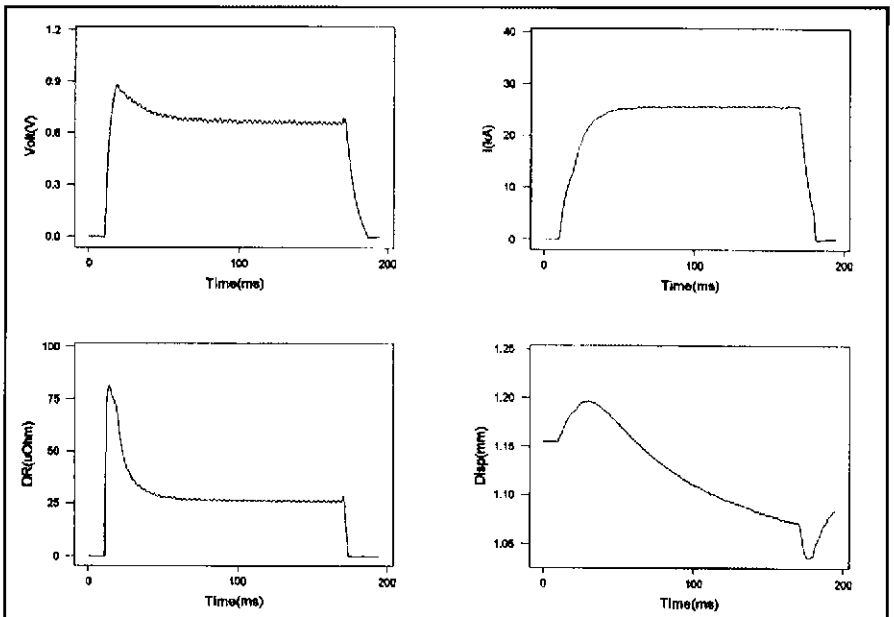

Fig. 2A — Examples MFDC welding signals.

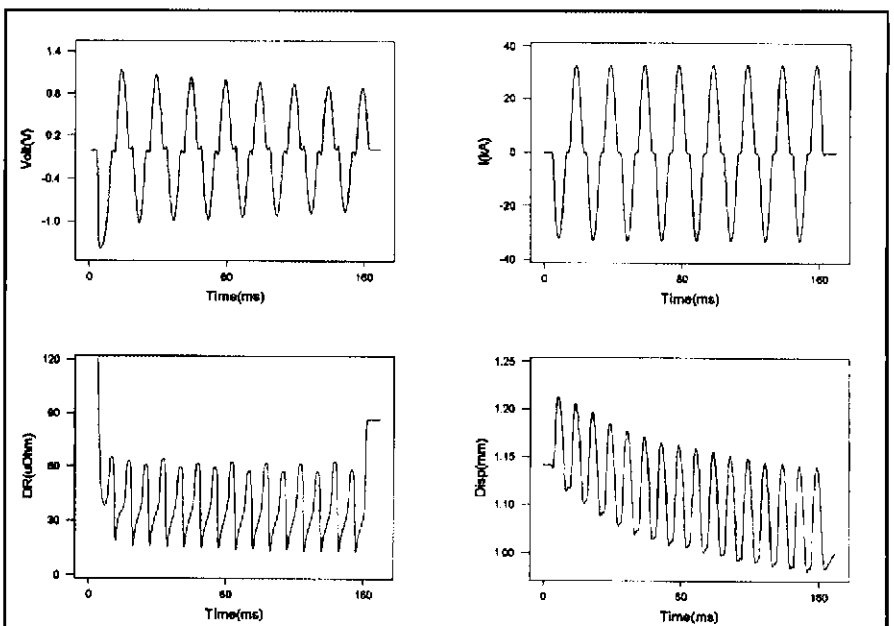

Fig. 2B — Examples of AC welding signals.

Experimental Procedure

The aluminum Alloy AA-5754 produced by Alcan in the O-temper was used for all experiments in 1- and 2-mm (0.04- and 0.08-in.) gauges. Two types of surface pretreatment were employed: acid etched and with a proprietary Alcan coating.

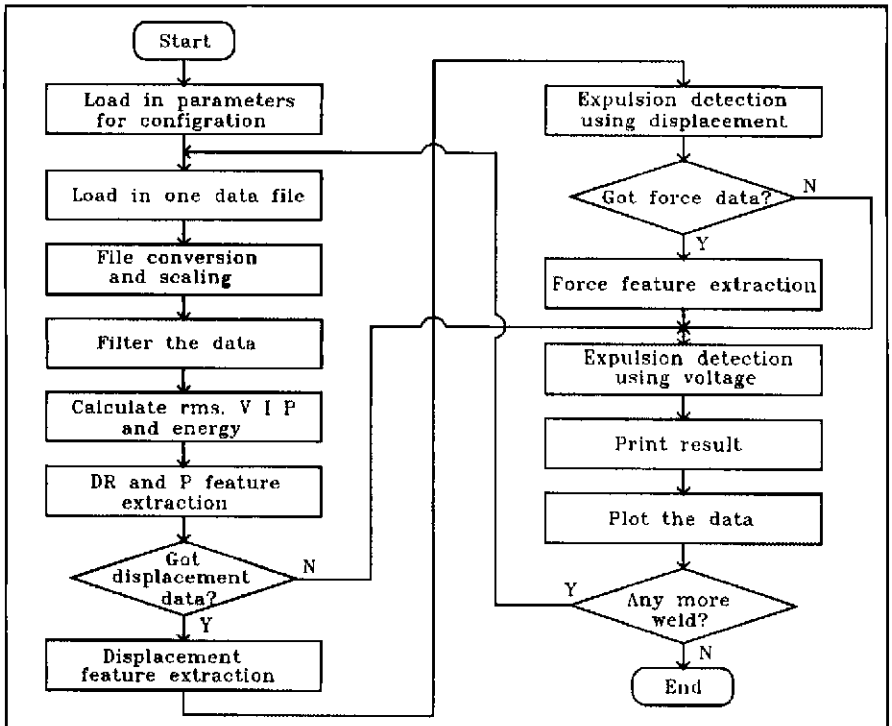

Fig. 3 -- Spot welding data analysis package diagram.

A single-phase 200 kVA AC and a twin 50-kVA MFDC welding system were used with scissor-type welding guns. Two types of specimen geometry, peel test strips and U-tension test specimens, were used for subsequent mechanical testing, as shown in Fig. 4.

Experiments were designed to examine weld quality under a range of welding conditions. Peel test settings are listed in Table 2. This group includes MFDC and AC welding, 1- and 2-mm sheet gauges, etched and coated material, different welding forces, with and without adhesive. Welding current was increased after each group of 10 or 20 welds had been produced. Only nugget diameter information is available from the peel tests.

The tensile test group, listed in Table 3 has both nugget strength and diameter available. The ACRANG test was conducted under different current levels while LIFEDC and LIFEAC are tip life tests that were run under constant heat settings. U-tension specimens were welded at preset intervals through each trial for mechanical testing.

Table 2 — Peel Test Welding Parameter Setting

Test name	Surface condition	Sheet gauge (mm)	Power source	Welding force (kN)	Welding current (kA)	Weld cycles
MAY28ET	Etched	2	MFDC	7	21,25,28,30	8
MAY28CO	Coated	2	MFDC	7	19,21,25,28,30	8
JUN10CA	Coated + Adhesive	2	MFDC	7	19,21,23,25,27,28,29,30	8
JUL31CO	Coated	2	AC	5.2	22,24,27,30,31	8
JUL31CA	Coated + Adhesive	2	AC	5.2	21,24,27,30,31	8
SEPT24ET	Etched	1	MFDC	5.2	16,19,21,22,24,26	4
SEPT24CO	Coated	1	MFDC	5.2	14,16,18,19,21,22	4
SEPT24CA	Coated + Adhesive	1	MFDC	5.2	14,15,17,19,21,22	4
AUG05CO	Coated	1	AC	5.2	19,22,24,27	6

Table 3 — Tensile Test Welding Parameter Settings

Test name	Surface condition	Sheet gauge (mm)	Power source	Welding force (kN)	Welding current (kA)	Weld cycles
ACRANG	Coated	2	AC	5.2	20,25,28,30	8
LIFEDC	Coated	2	MFDC	5.2	27	8
LIFEAC	Coated	2	AC	5.2	28	8

Analysis of Results

Analysis Methods

The primary aim of the analysis was to predict weld size and, where appropriate, weld strength, from the features extracted by the data processing. Secondary aims included the identification of expulsion and the evaluation of process variables on weld formation.

Statistical analysis was employed extensively throughout the analysis, primarily linear and multiple linear regression. Details of the theory of linear and multiple linear regression can be found in the Appendix.

When conducting multiple regression analysis, there is a question of balancing "goodness of fit" and "generality." Taking more predictors into the model may improve fitting quality but this may reduce prediction accuracy for unseen data. The goodness of fit comes from two sources: 1) the underlying structure of the data that will be common to data sets sampled from the same population; and 2) the peculiarities of a particular data set. One method of testing the generality is to randomly divide the data set into two. Assuming the data are homogeneous, the model for one half should be similar to that for the other. Unfortunately this is not practicable when small data sets are used. In such cases, it is possible to dynamically divide the data into two groups. Each data point is used both for forming the model and testing it. This can be done by removing a single data point from the data set and using the remainder to form the regression equation. The model is then used to predict the observation for the removed data point. This is repeated for the whole data set one point at a time. We refer to this method as multiple regression with validation test.

The root mean square error (RMSE) of prediction gives an estimate of standard deviation of prediction residual that can be used to form a confidence interval as follows:

90% interval = ±1.65RSME

95% interval = ±1.96RSME

Analysis of Results

The features extracted from the weld data during processing have been ana-

lyzed using the above methods. First, the correlation between the response, weld diameter or load, and the extracted feature was investigated. Regression was then applied to find the best combination of features to form the model, using the validation test.

Analysis of the peel test groups was restricted to prediction of nugget diameter as no strength data were available from these tests. The rms value of voltage, current and power were the primary features investigated for their correlation with diameter. Other measures, such as dynamic resistance and displacement features were examined subsequently. As all the trials in this group used a wide range of welding currents, the correlation between nugget diameter and power, current, and voltage are clearly apparent, as shown in Fig. 5.

Several features of dynamic resistance, such as Rmax, Rmean, Rfinal (MFDC) or Rlast (AC), and Rslope were also examined. The Rmean and Rfinal values showed some correlation with diameter as shown in Fig. 6, but were inferior to P, I or V.

For all the trials in this group, P, I or V were able to provide a fairly good prediction for diameter. The goodness of fit achieved can be seen in Table 4, column 1. This could, however, be improved significantly by using additional predictors, *i.e.*, applying multiple linear regression. On average ,the rms error was reduced by about 30% compared with the best single feature model, as can be seen in Table 4 column 2. The effect of this can be seen in Fig. 7 where the predicted diameter clearly follows the measured value.

The multiple linear regression method can improve generalization compared to a single predictor. The optimal single predictor for a specified trial varies depending on the nature of the trial. For this reason, it can be seen that no model based on a single predictor such as P, I or V would be applicable over a range of test conditions. In production environments a variety of different situations would be met, for example, different combinations of sheet gauges, with or without adhesive. It is therefore necessary to use the multiple linear regression model to cope with a wide range of welding conditions. Figure 8 shows the result of predicting weld diameter for different surface types, sheet gauge and presence or otherwise of adhesive. In this case, primary features, like voltage shown in Fig. 5A, failed to show good correlation with nugget diameter. On the contrary, the multiple linear regression model was able to predict nugget diameter well, using features extracted from the welding data only, as shown in Fig. 8B.

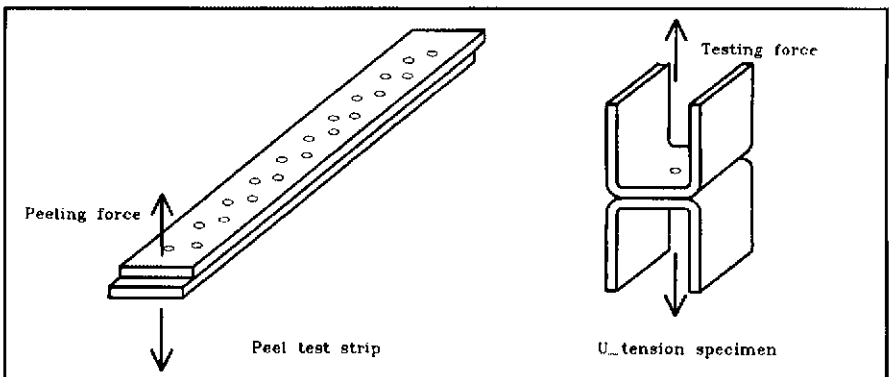

Fig. 4 — Spot weld test specimens.

Although nugget diameter is often taken as a criterion for assessing spot weld quality, it is not necessarily a good indicator of weld strength. Figure 9A shows a plot of static load against nugget diameter for the LIFEDC data set. Although there appears to be a trend, it is not possible to predict load from the diameter data with any degree of accuracy. It was therefore decided to investigate prediction of strength from the extracted features.

The correlation between strength and the primary weld features, P, I and V, has been examined. Figure 9B shows load

Table 4 — Diameter Prediction Result

Test name	Best single predictor regression RSME (mm)	R	Multiple regression result RSME (mm)	R	Regression with validation test RSME (mm)	R
MAY28ET	0.283	0.992	0.225	0.996	0.238	0.995
MAY28CO	0.386	0.965	0.202	0.990	0.217	0.988
JUN10CA	0.385	0.950	0.203	0.985	0.230	0.982
JUL31CO	0.477	0.894	0.389	0.937	0.455	0.890
JUL31CA	0.275	0.922	0.192	0.967	0.211	0.955
SEPT24ET	0.258	0.921	0.197	0.961	0.205	0.950
SEPT24CO	0.148	0.981	0.114	0.990	0.120	0.988
SEPT24CA	0.241	0.960	0.185	0.979	0.199	0.973
AUG05CO	0.288	0.890	0.191	0.960	0.206	0.943
MIX4TYPE	0.330	0.889	0.176	0.970	0.187	0.966

RSME: Root mean square error.
R: Correlation coefficient between measured and predicted value.

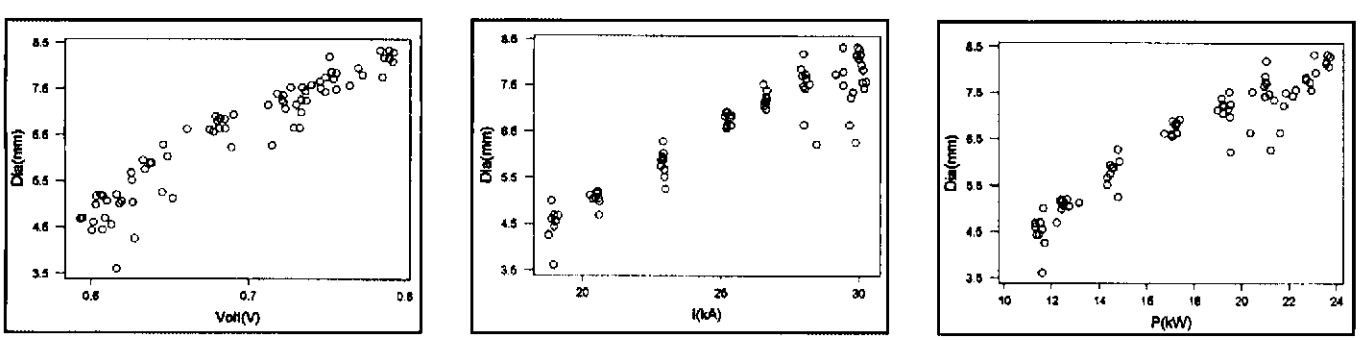

Fig. 5 — Diameter vs. primary welding features (JUNE 10CA data).

Table 5 — Static Tensile Strength Prediction Result

Test name	Best single predictor regression RSME (mm)	R	Multiple regression result RSME (mm)	R	Regression with validation test RSME (mm)	R
ACRANG	0.802	0.787	0.492	0.939	0.530	0.911
LIFEDC	0.669	0.657	0.376	0.920	0.414	0.883
LIFEAC	0.672	0.762	0.423	0.931	0.538	0.861

RSME: Root mean square error.
R: Correlation coefficient between measured and predicted value.

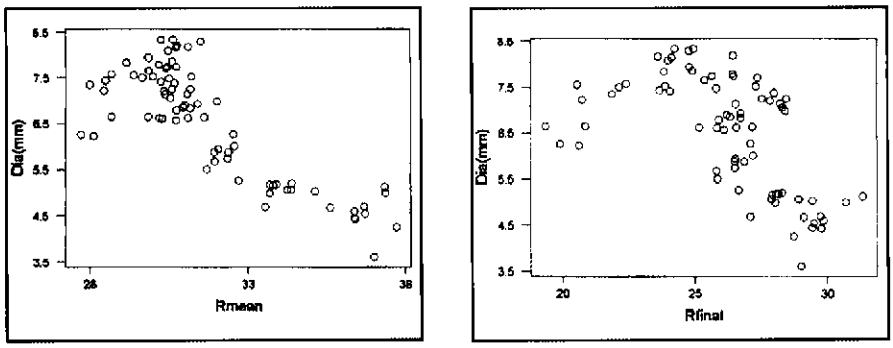

Fig. 6 — Diameter vs. resistance (uOhms) (JUNE 10CA data).

plotted against power for the LIFEDC trial and a lack of good correlation is apparent. Correlation with other single features such as I, V or resistance features is no better.

However, when multiple linear regression is applied using three or four features selected after careful investigation, satisfactory results for strength prediction can be achieved. Figure 9C shows the result for this trial. The results for this group are summarized in Table 5. The rms error can be seen to range from 0.4 to 0.5 kN, a significant improvement over that obtainable from a single predictor.

Discussion

The results from the data logging and analysis systems have shown that while the prediction of weld size from a single electrical feature is possible, the particular feature that must be used depends on the combination of material, gauge, surface condition and presence or absence of adhesive. It is therefore essential to use a number of features together to improve the generality of the prediction across a range of situations likely to be met in practice. Furthermore, prediction of weld strength, while extremely difficult from a single feature, becomes much more practicable when a combination of features is used. This, therefore, casts doubts on the relevance to aluminum of some of the methods used in most commercial weld controllers, which are described in detail below.

Dynamic Resistance

This method has been applied successfully by a number of control equipment vendors for the spot welding of mild steel, but it has proved less successful with coated steels. One common criticism is that significant calibration is required for each weld schedule and material combination. However, it has been shown that the dynamic resistance profile of aluminum is much flatter than that of steel for a number of reasons. It is unlikely that dynamic resistance alone can yield significant indication suitable for monitoring of spot weld quality of aluminum, although some useful information has been found (Ref. 21).

Throughout the analysis of the data, several measures of resistance, such as Rmax, R1, Rslope, Rfinal and Rmean have been investigated to examine any relationship with nugget diameter or load. Dynamic resistance was shown to be a poor predictor for both nugget diameter and strength.

Monitoring of Nugget Expansion

Some steel spot welding researchers have reported (Refs. 12–16) that spot weld formation can be identified by monitoring displacement of the tips. In this work, a number of features from the electrode displacement data have been extracted. The correlation between these features and nugget diameter varied widely from trial to trial.

For 2-mm-gauge MFDC welding tests, there is evidence of a relationship between expansion and diameter as shown in Fig. 10A. In other cases, for example 1-mm sheet, the relationship appears nonexistent, as shown in Fig. 10B. In general, the nugget expansion information alone appears to be of limited use for predicting nugget diameter for aluminum.

Other Monitoring Methods

Voltage, current and power are the three major predictors in most of the cases studied. However, the results ob-

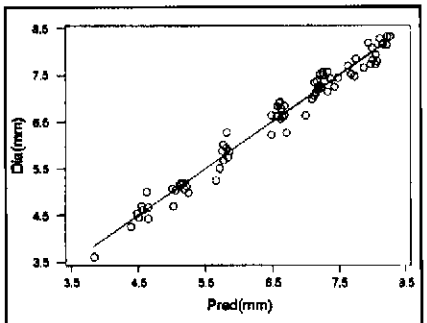

Fig. 7 — Multiple regression result for diameter prediction (JUNE 10CA data).

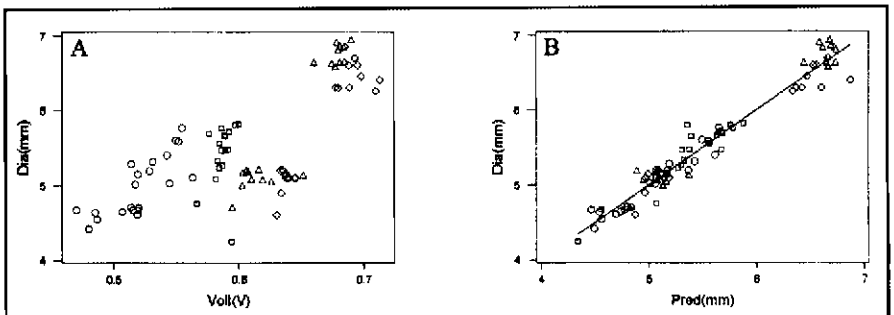

Circle: 1mm Coated; Square: 1mm Coated+Adhesive
Diamond: 2mm Coated; Triangle: 2mm Coated+Adhesive.

Fig. 8 — Diameter prediction for mixed materials.

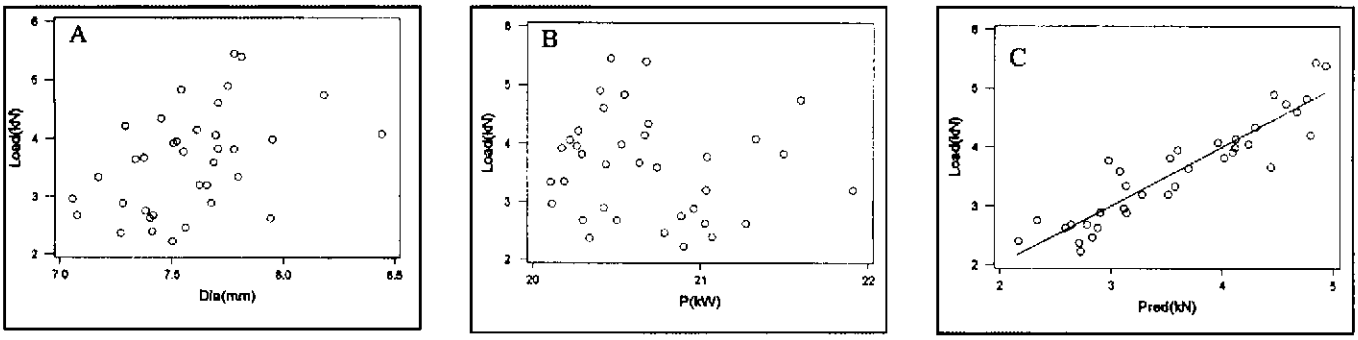

Fig. 9 — Static load prediction result (LIFEDC data).

tained from aluminum indicate that the relationship between each of these features and weld diameter or weld strength varies depending on the combination of material type and the presence of adhesive. None of the individual signals can be used as a "universal predictor." It is believed, therefore, that it is not feasible to develop a monitoring and control strategy for aluminum based on the measurement of a single process parameter.

Accurate Prediction of Diameter and Strength

For the data set used in this work it has proved possible to predict nugget diameter from one or more features extracted from the weld data. The majority of rms errors were in the range of 0.12 to 0.24 mm (0.005 to 0.009 in.). This means that 90% of prediction errors were between ±0.2 and ±0.4 mm (±0.007 and ±0.015 in.).

Significantly, it has also proved possible to predict nugget strength using only the electrical parameters. For the three data sets used here, rms errors of between 0.41 and 0.54 kN were obtained. This means that 90% of weld strengths were predicted within ± 0.68 to ±0.89 kN for the conditions used.

Expulsion Detection

The occurrence of expulsion is particularly unwelcome in weldbonding where the integrity of the bond line may be affected. Data from a weld with an expulsion event can be seen in Fig. 11.

As expected, tip displacement was found to be a good indicator of expulsion. When expulsion occurs, molten metal is ejected from the fusion zone and the nugget collapses, producing a sharp transient on the electrode displacement curve as the tips move closer together. The change in displacement appears to be a good indication of the severity of expulsion. This will obviously be affected by welding force and sheet gauge, together with gun stiffness characteristics.

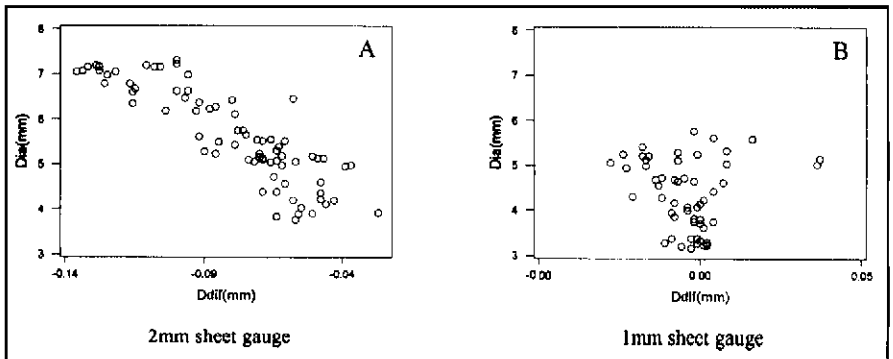

Fig. 10 — Diameter vs. tip displacement. A — 2-mm sheet; B — 1-mm sheet.

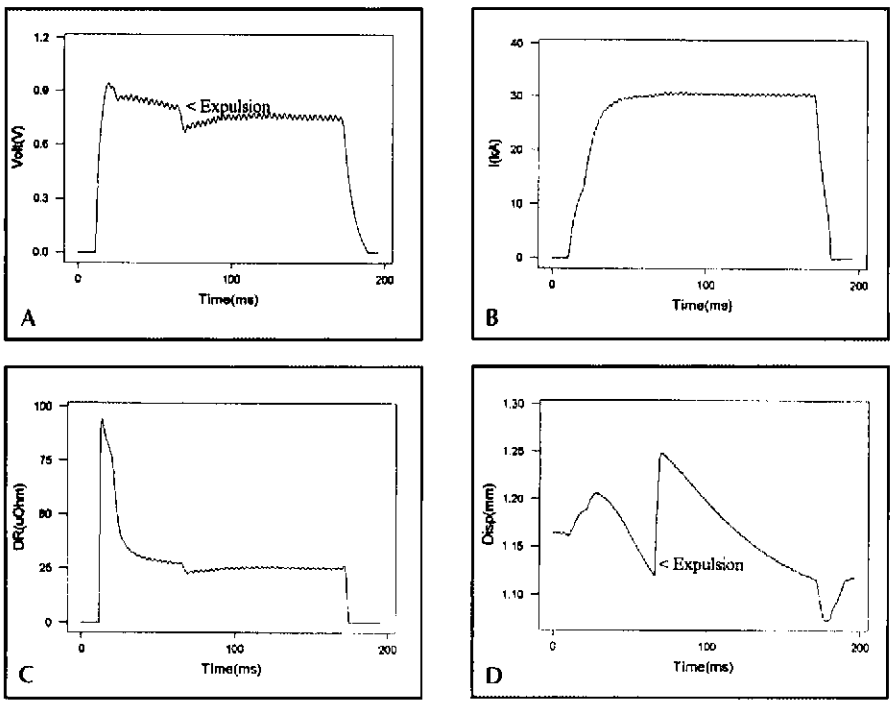

Fig. 11 — Signals from a weld showing expulsion.

Measurement of tip displacement in a nonintrusive manner is often impractical in production. It would be advantageous if expulsion could be identified from the electrical measurements that can be made without intrusive sensors. A study has been carried out to identify expulsions from the electrical data only, and it has proved possible to identify expulsion from the voltage and calculated power traces. This has been tested on a data set of over 300 welds with correct identification of all but 2% of minor expulsion events, which would have little effect on either nugget or adhesive layer. A separate publication has been dedicated to this work (Ref. 22).

Conclusions

1) A data acquisition and processing system has been developed to capture data from aluminum spot welding and extract pertinent features from the raw data.

2) The relationship between weld size and tensile strength with the extracted features has been investigated. No single feature has been found which can predict diameter or strength over a range of process settings and material combinations when spot welding aluminum.

3) Multiple linear regression methods, using a combination of predictors have proved successful in predicting both weld diameter and weld strength.

4) None of the electrical or thermal methods proposed for monitoring of steel spot welding has been found to be generally applicable to aluminum.

5) Expulsion can be identified from the voltage or power traces without the need for displacement and force measurement.

6) Work to date has shown that the prediction of nugget diameter and strength and the detection of expulsion is feasible with electrical measurement alone. This will greatly simplify the application of these methods in a production environment.

Acknowledgment

The authors wish to thank Alcan International Ltd., Banbury Laboratories, for continued funding of this program and permission to publish this paper.

References

1. Warren, A. S. 1991. The future for increased use of aluminium in cars. *Aluminium* 67(11): 1078–1080.

2. Johnson, K. I. 1976. Aluminium in vehicle bodies. *Metal Construction* 8(9): 392–395.

3. Handly, S., Wallett, C., and Osman, K. A. 1988. Trends in the resistance spot welding of aluminium and aluminium alloys. Research report. City of Birmingham Polytechnic.

4. Westgate, S. A. 1983. Weldbonding of 1-mm aluminium alloy sheet. Report No. 226/1983. The Welding Institute, Abington, U.K.

5. Hall, E. T., and Crecraft, D. I. 1971. Bonded joints and non-destructive testing — NDT of resistance spots, roll-spots, stitch and seam welds. *Non-Destructive Testing*, June, pp. 181–191.

6. Cohen, R. L, and West, K. W. 1985. Aluminum spot weld strength determined from electrical measurements. *Welding Journal* 64(6): 37–41.

7. Bangs, E. R. 1992. Thermal imaging: real-time monitoring of critical RSW applications. Paper No. B4, *Sheet Metal Welding Conference V*, Detroit, Mich.

8. Broomhead, J. H, and Dony, P. H. 1990. Resistance spot welding quality assurance. *Welding and Metal Fabrication*, July, pp. 309–314.

9. Gedeon, S. A., Sorensen, C. D., Ulrich, K. T., and Eagar, T. W. 1987. Measurement of dynamic electrical and mechanical properties of resistance spot welds. *Welding Journal* 66(12): 378-s to 385-s.

10. Vahaviolos, S. J., Carlos, M. F., and Slykhous, S. J. 1981. Adaptive spot weld feedback control loop via acoustic emission. *Materials Evaluation*, October, pp. 1057–1060

11. Wrigley, A. 1977. GM using acoustic-type adaptive welding controls. *American Metal Market/Metal Working News*, March 21.

12. Chang, H. S., Cho, Y. J., Choi, S. G., and Cho, H. S. 1989. A proportional integral controller for resistance spot welding using nugget expansion. Transaction of the ASME, *Journal of Dynamic System, Measurement and Control*, June, pp. 332–336.

13. Taylor, J. L., and Xie, P. 1987. A new approach to the displacement monitor in resistance spot welding of mild steel sheet. *Metal Construction* 19 (1): 72–75.

14. Tsai, C. L., Dai, W. L., Dickinson, D. W., and Papritan, J. C. 1991. Analysis and development of a real-time control methodology in resistance spot welding. *Welding Journal* 70(12): 339-s to 351-s.

15. Tsai, C. L., Dai, W. L., and Dickinson, D. W. 1992. Experimental study of weld nugget expansion/contraction behavior of resistance spot welding. Paper No. B1, *Sheet Metal Welding Conference V*, Detroit, Mich.

16. Wu, K. C., and Goode, J. 1992. Indentation/deflection feedback control for spot welding. Paper No. B3, *Sheet Metal Welding Conference V*, Detroit, Mich.

17. Williams, N. T., Johnson, K. I., Beatson, E. V., *et al.* 1977. *Resistance Welding Control And Monitoring*. The Welding Institute. Abington, U.K.

18. Dickinson, D. W., Franklin, J. E., and Stanya, A. 1980. Characterization of spot welding behavior by dynamic electrical parameter monitoring. *Welding Journal* 59(6): 170-s to 176-s.

19. Patange, S. R., and Anjaneyulu, T. 1985. Microprocessor-based resistance welding monitor. *Welding Journal*, 64(12): 33–38.

20. Hao, M., Osman, K. A., Holden, N. J., Boomer, D. R., and Newton, C. J. 1995. A data acquisition and signal processing system for aluminium spot welding. *Proceedings of The 3rd International Conference on Sheet Metal*, UCE Birmingham, U.K.

21. Hao, M., and Osman, K. A. 1993. Characterization and control of resistance spot welding of aluminium — report on analysis of process data. Research report, UCE Birminham, U.K.

22. Hao, M., Osman, K. A., Boomer, D. R., and Newton, C. J. 1996. On-line detection of nugget expulsion for aluminium spot welding and weldbonding. To be presented at the 1996 SAE Int'l Congress and Expo, Detroit, Mich.

Appendix

Linear regression is used to explore the relationship between dependent variable Y and an independent variable x. The assumption of this model is that the expectation of Y depends linearly on x in the form

$$E(Y|x) = a+bx$$

For a given data set, there will be only one solution to provide the best fit, often called the least square line. In many real world cases, the expectation of a dependent random variable will be a function not of a single real variable, but of two or more. Therefore, the simple regression model is expanded as

$$E(Y|x_1,x_2,\ldots,x_k)=a+b_1x_1+b_2x_2+\ldots+b_kx_k$$

The model is referred to as the multiple linear regression model. The independent variables $x_1,x_2,\ldots,x_k$ are often called regressors or predictors.

When the assumption of the linearity is not suitable, a nonlinear relation can be transferred into a linear one by transformation. In the single predictor case, polynomial fitting is often useful.