WELDING RESEARCH

SUPPLEMENT TO THE *WELDING JOURNAL*, APRIL 1996
Sponsored by the American Welding Society and the Welding Research Council

Contraction Ratios in Thick Aluminum Welded Joints

Longitudinal and transverse strains were measured in welded joints subjected to tension to determine contraction ratios at specific locations in the joint

BY S. C. GAMBRELL, Jr., AND KISHEN KAVIKONDALA

ABSTRACT. Contraction ratios in the plastic range were determined for 35.6-mm-thick aluminum gas-tungsten-arc-welded (GTAW) heat-treated joints made from 2219-T87 base metal and 2319 filler metal. Stress-strain and contraction ratio curves at selected points in the weld and heat-affected zone are given. Measured contraction ratios are compared to those obtained using three theoretical assumptions. Welding specifications (current, volts, shielding gas flow, wire feed rate, travel rate) and Rockwell B hardness values across the weld at various planes are presented.

Introduction

Aluminum welded joints are an important part of the Shuttle and many other space structures and are difficult to mathematically model. Attempts to model joints for predicting strains ε_x and ε_y using the finite element code ABAQUS have been less than satisfactory (see Figs. 1 and 2 for coordinate directions). To date, compared to measured values, predictions for ε_x have been more accurate than predictions for ε_y.

S. C. GAMBRELL, Jr., is Professor of Engineering Mechanics and KISHEN KAVIKONDALA is Graduate Research Assistant, Department of Engineering Science and Mechanics, The University of Alabama, Tuscaloosa, Ala.

Burghard and Norris (Ref. 1) and Vederaime (Ref. 2) used electromechanical extensometers and/or strain gauges to examine behavior of welded joints and to determine strain at selected points in the heat-affected zone.

Gambrell (Ref. 3) used photoelastic coatings to determine yielding characteristics in welded joints and reported values for contraction ratios in the plastic range for 100% pure filler metal (2319) and pure base metal (2219-T87) determined using Chakrabarty's (Ref. 4) approximation. In his approximation, the contraction ratio, α, is defined by the equation

$$\alpha = 0.5 - (0.5 - \mu)\frac{E_t}{E}$$

where μ is Poisson's ratio, E_t is the tangent modulus taken from an engineering stress-strain curve, and E is the modulus of elasticity. Thus, using data from a stress-strain curve, contraction ratios in the plastic range can be determined as a function of applied tensile stress.

KEY WORDS

Aluminum
Mechanics of Welds
Contraction Ratios
GTAW
Heat-Treated Joints
Longitudinal Strains
Transverse Strains
Tensile Test
Rockwell B Hardness
Chakrabarty's Approx.

In references cited above, no effort to determine contraction ratios for inelastic behavior of material in a complete welded joint has been reported. In attempts to model the joint, approximations for contraction ratios have included 1) the assumption that it is 0.50 for all plastic deformation, 2) that it varies linearly from Poisson's ratio to 0.50 between the proportional limit and the ultimate stress, and 3) Chakrabarty's approximation.

Gambrell and Kavikondala (Ref. 5) used photoelastic coatings to detect yielding and determine stress-strain characteristics of aluminum GTAW postweld heat-treated (177°C for 18 h) joints loaded in uniaxial tension. It was shown that significant differences exist in stress-strain characteristics at points beginning at the centerline of the weld and extending for a distance of 25.4 mm (1 in.) to either side of the weld. During these tests, it was observed that one side of the welded joint yielded at much lower values of tensile stress than did the other side with the average ratio of the higher to lower proportional limits being 2.13. These sides were identified as the "weak" or outside diameter (OD) and the "strong" or inside diameter (ID) — Figs.

Table 1 — Weld Specifications

Pass	Welding Current (A)	Welding Voltage (V)	Shield Gas Flow (L/min)	Wire Feed Rate (m/min)	Travel Rate (cm/min)
Tack (OD)	230	13.0	37.83	0.00	20.32
Root penetration (OD)	380	12.9	37.83	0.00	11.43
1st Fill (ID)	360	12.9	37.83	1.63	16.51
2nd Fill (ID)	360	12.9	37.83	1.60	16.51
3rd Fill (OD)	360	12.9	37.83	1.57	16.51
4th Fill (OD)	360	12.9	37.83	1.07	16.51
5th Fill (OD)	360	12.9	37.83	1.07	16.51
6th Fill (ID)	360	12.9	37.83	1.40	16.51

1, 2, Table 1. The terms OD and ID refer to the welding plan (or sequence of weld passes) used to form the joint and to the outside and inside diameters of the circular (5.045-m mean diameter, 35.6-mm wall thickness) aft skirt of the solid rocket boosters used when launching the Shuttle. This weld is used to attach the hold-down posts to the aft skirt.

While residual stresses are normally present in welded joints, even though they may be relieved somewhat by postweld heat treatment, they were not considered in this work. Behavior of the joints over and above those residual stresses present was of primary concern.

The purpose of this research was to determine actual contraction ratios in the plastic range for the aft skirt aluminum GTAW joints 35.6 mm (1.4 in.) thick in a postweld heat-treated condition. These ratios are needed to improve accuracy in mathematical modeling of this type of joint.

Experimental Procedure

For results reported in this paper, the actual contraction ratios at points along the centerline and the 12.7-mm (0.5-in.) line were determined by dividing the measured transverse strain ε_y by the measured longitudinal strain ε_x. On the OD and ID sides of the weld, contraction ratios were determined by dividing ε_y by ε_x — Figs. 1, 2.

Joints were welded using 2319 filler metal and 2219-T87 base metal. Specimens were heat treated for 18 h at 177°C (351°F) prior to testing. This represented material in the postweld aged condition. Each test was repeated two times and data were analyzed using either linear or nonlinear curve fitting software. As a first step, basic stress-strain data were obtained from standard tensile test specimens (Fig. 1) loaded using a computer-controlled universal testing machine. Because of the heating and cooling that occurred during the welding process, all test specimens were slightly distorted or "peaked" at the weld location with a slight concave out-of-plane displacement occurring along a normal to the OD surface of the specimen. The effect of this "peaking" can be observed in stress-strain curves as an offset along the strain axis at zero stress.

Data were taken in the longitudinal and transverse directions using two-element strain gauges having a gauge length of 0.81 mm. In previous work measuring strain in the 2319 filler metal and in the heat-affected zone of aluminum 2219-

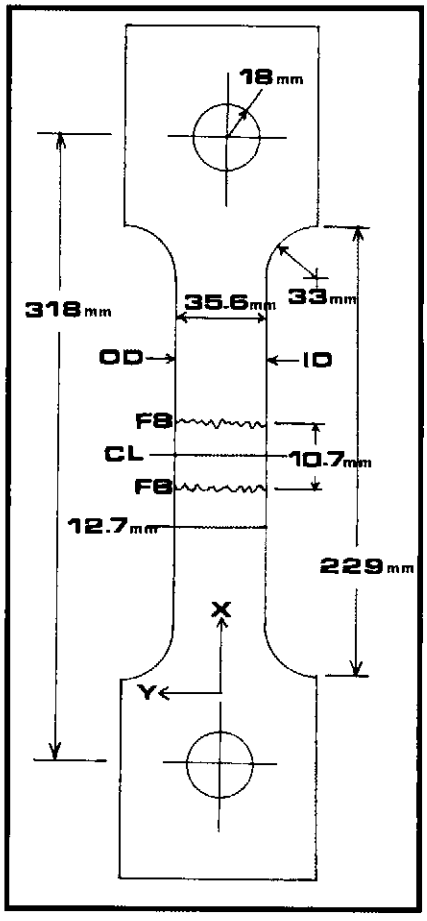

Fig. 1 — Tensile specimen.

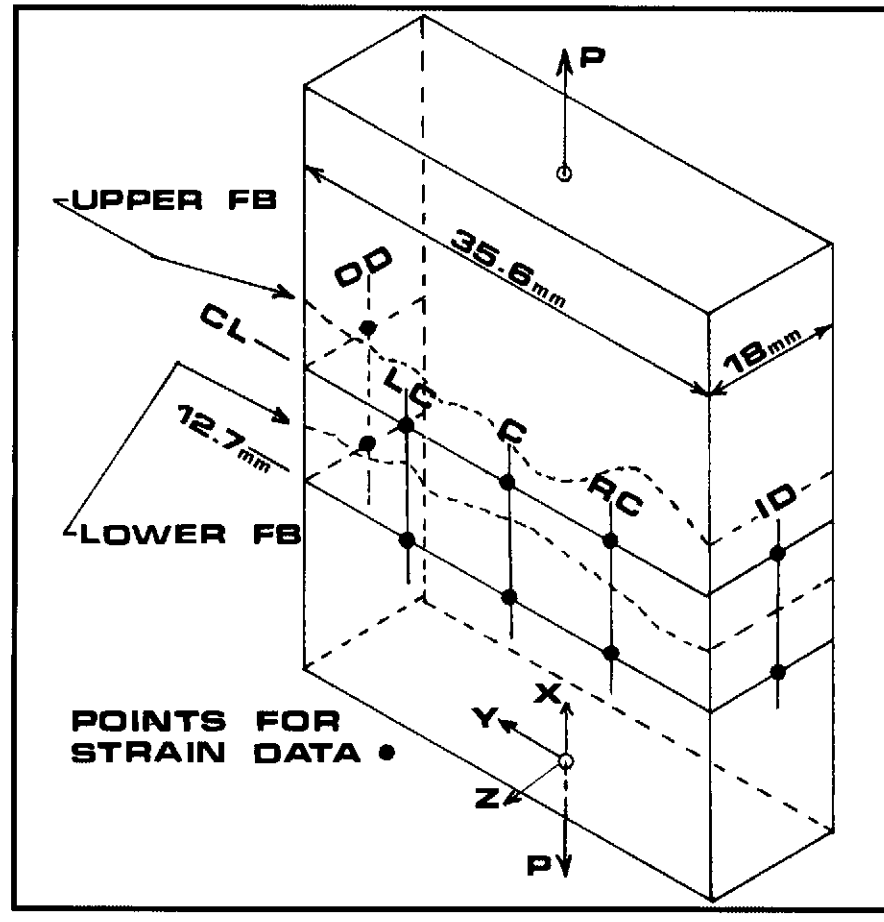

Fig. 2 — Points for data collection.

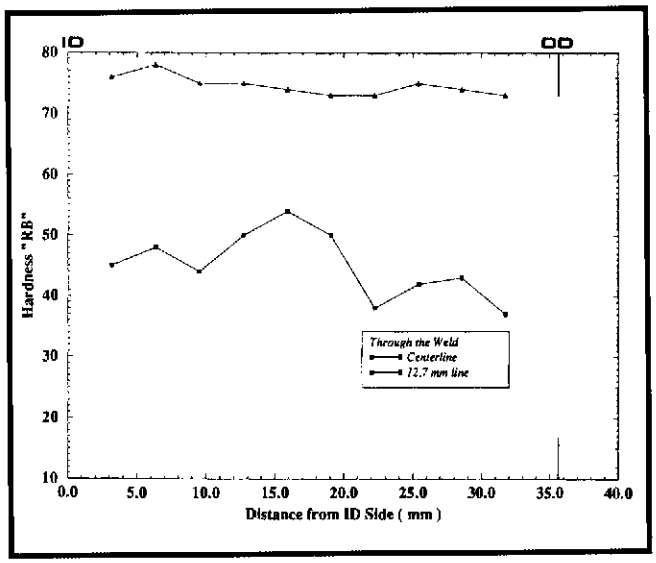

Fig. 3 — Rockwell B hardness, centerline and 12.7-mm line.

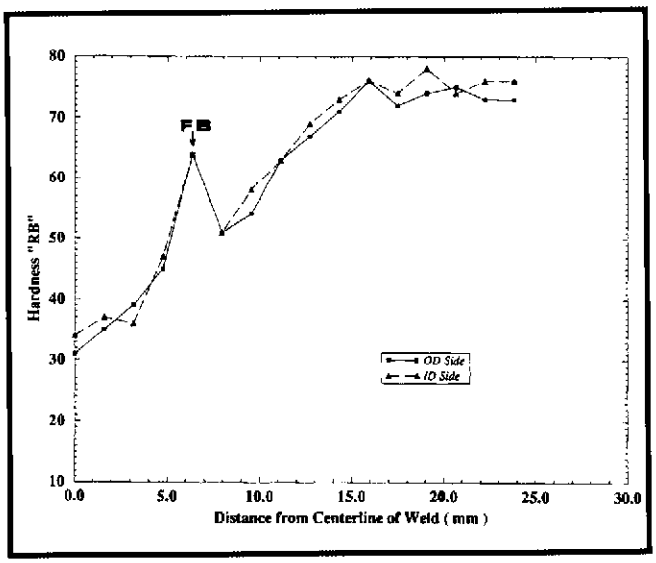

Fig. 4 — Rockwell B hardness, OD and ID sides.

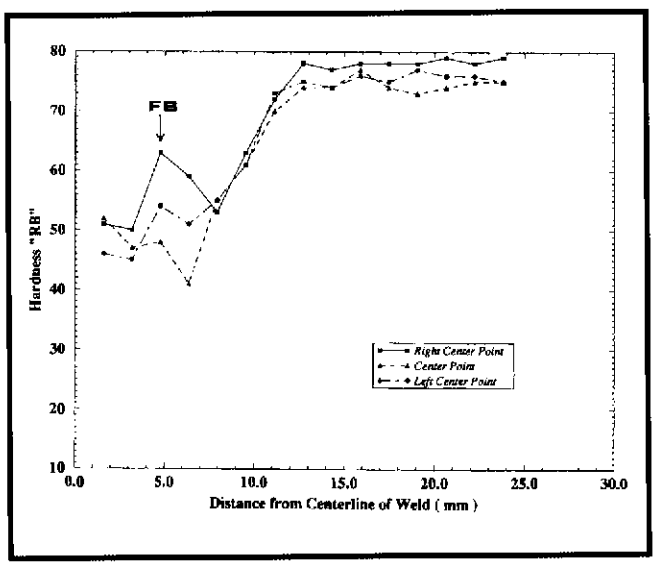

Fig. 5 — Rockwell B hardness, RC, C, and LC points.

T87 welded joints, Gambrell (Ref. 3) showed that there was no significant difference in measured strain values when using gauges having gauge lengths of 0.38, 0.81 and 1.57 mm. Therefore, to operate in the limited space on the surface of the tensile specimens and to facilitate ease of gauge application, gauge lengths of 0.81 mm were chosen for these tests. Points where data were collected in the weld metal and heat-affected zone are shown in Fig. 2. Points OD, LC, C, RC and ID were spaced 8.9 mm (0.35 in.) apart, thus covering the entire thickness through the weld. Gauges were bonded to the specimen using a two-component contact adhesive. A polyurethane protective coating was applied to each gauge and incoming wires. A three-lead wire, quarter-bridge circuit was used to measure strains, and all measured strains were corrected for bridge nonlinearity and transverse sensitivity of the gauges (Refs. 6, 7). To prevent loading of gauge tabs, only one small wire in the bundle of seven wires in the three-conductor cable was attached to each tab.

A load-hold-load cycle was used to stress the tensile specimens as follows:

1) Zero to 138 MPa (20 ksi) — 13.8 MPa (2 ksi) increments.

2) 138 to 310 MPa (20–45 ksi) — 6.9 MPa (1 ksi) increments.

Data were taken during each hold using a static strain indicator and a switching and balancing unit.

Rockwell B hardness tests were conducted on the face and sides of the specimens. Weld specifications for the multipass procedure used to fabricate the joint are given in Table 1.

Test Results

Hardness Tests

Joints produced by multipass welds have variable properties on a point-by-point basis. Rockwell B hardness measurements were made 1) along the weld centerline across the 35.6-mm thickness, 2) across the 35.6-mm thickness at the 12.7-mm line, 3) at points on the OD and ID sides measured vertically from the centerline of the weld, and 4) at left center, center, and right center points measured vertically from the centerline of the weld — Fig. 2.

Figures 3–5 show typical hardness values measured at various locations in the joint. Figure 3 indicates a general increase in hardness along the centerline as one moves from the OD side to the ID side of the weld. Figure 3 also indicates that hardness is relatively constant, between 73 and 78, along the 12.7-mm line. Figures 4 and 5 indicate a general increase in hardness as one moves from the centerline of the weld outward to points in the heat-affected zone to a distance of approximately 15 mm (0.6 in.) where hardness becomes relatively uniform at approximately Rockwell B 75. In Fig. 4, the weld interface is located at 6.4 mm (0.25 in.), and in Fig. 5, it is located at 4.8 mm (0.19 in.). Because of inherent variations in the welding process, the shape and location of the weld interfaces were somewhat different from specimen to specimen. Typical locations of the upper and lower weld interfaces are shown in Fig. 2 by dashed lines, which are representative of the weld interface locations seen in Fig. 6. However, Figs. 4 and 5 depict the characteristic location of the weld interfaces for the typical specimen.

Figure 6 shows a typical macrograph of the face and side views of the weld, which clearly indicates the nonuniformity in shape and location of the weld through the 35.6-mm thickness. Irregularly shaped weld interfaces are clearly visible above and below the weld material. Typical peaking of the welded joint is indicated in Fig. 6, which shows the concavity on the OD side.

Tensile Tests

Figures 7 and 8 show material behav-

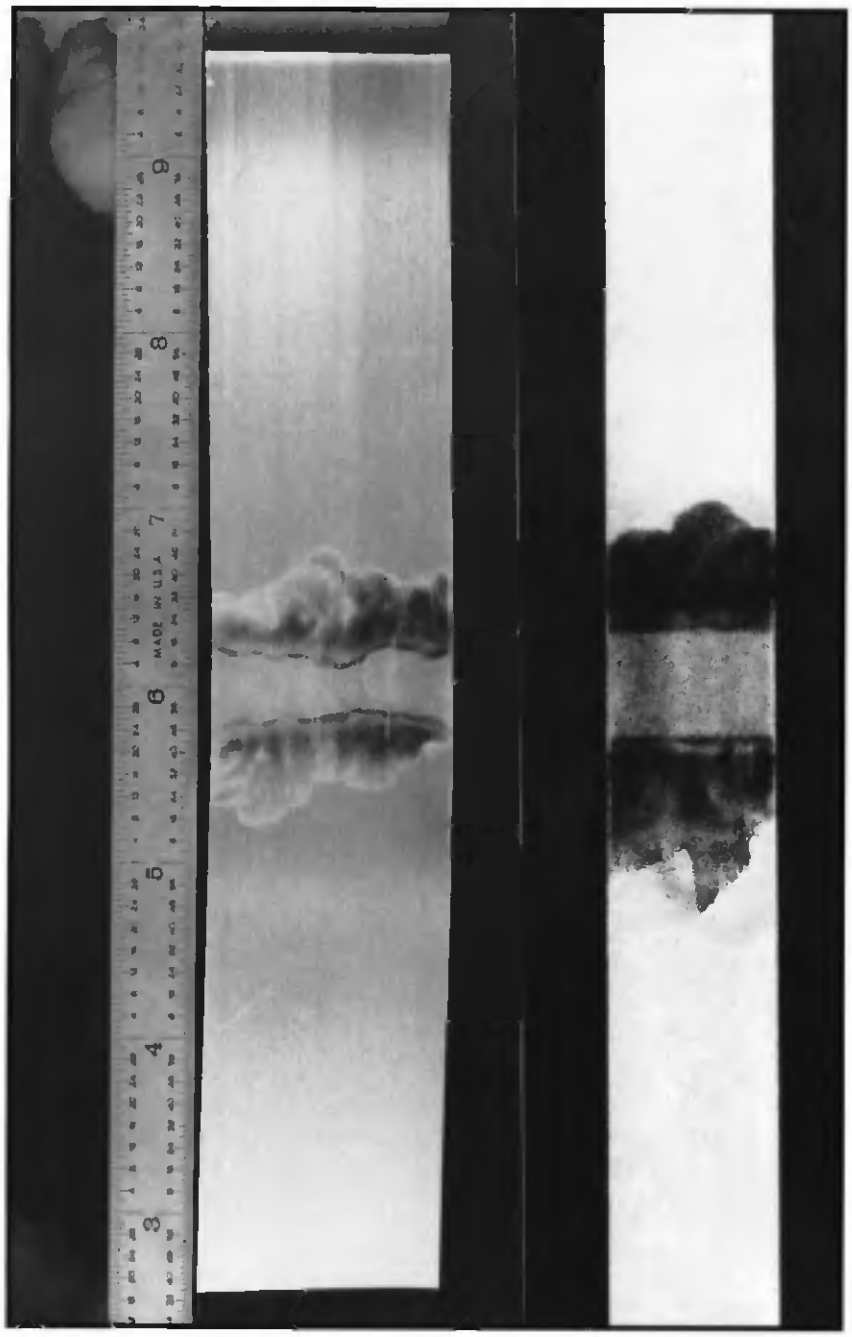

Fig. 6 — Macrograph of typical specimen.

Table 2 — Proportional Limits (MPa)

Along the centerline	OD=54.5
	LC=69.0
	C=84.2
	RC=78.7
	ID=115.9
Along the 12.7-mm line	OD=108.3
	LC=86.3
	C=69.0
	RC=142.8
	ID=93.2

ior along the centerline of the weld and along the 12.7-mm line, respectively. From these curves, values of the proportional limit were obtained for use in plotting curves for contraction ratios at the points. In this work, in order to make a valid comparison with Chakrabarty's approximation, the proportional limit was defined as that point on the stress-strain curve at which the curve first deviates from linearity. Use of the 0.2% offset was not chosen since the tangent modulus at that point is much less than the modulus of elasticity and the contraction ratio may be quite different from Poisson's ratio. Proportional limits at the several points identified in Fig. 2 are given in Table 2.

Note in Fig. 7 that, at a given stress below 260 MPa (37.7 ksi), the proportional limit and tangent modulus generally increase along the centerline of the weld as one moves from the OD to the ID side of the joint, thus corresponding to the similar general increase in hardness between the two sides. In Fig. 8, values for the proportional limit along the 12.7-mm line have no consistent, definite trend and vary on a point-by-point basis as seen in the list of values in Table 2. However, except on the curve representing the OD point, values for the tangent modulus at a given stress below 270 MPa (39.2 ksi) generally increase as one moves from the OD to the ID side.

Contraction Ratios

Contraction ratios ($\varepsilon_y/\varepsilon_x$ or $\varepsilon_z/\varepsilon_x$) determined by using corrected transverse and longitudinal strains are given in Figs. 9 and 10. For uniaxial tensile tests, Poisson's ratio is applicable at a point on the surface of the specimen for stresses up to and including the proportional limit, but not beyond. In these tests, at points along the weld centerline (Fig. 9) and the 12.7-mm line (Fig. 10), measured values of Poisson's ratio for stresses up to the proportional limit varied between 0.255 and 0.328. In figures showing contraction ratios, the ordinate shows values of the applied stress minus the proportional limit stress (Stress-PL), thus characterizing material behavior in the plastic region. It may be seen that, on the 35.6-mm-thick surface (points LC, C, and RC), contraction ratios vary from 0.15 to 0.46 and are generally nonlinear and variable on a point-by-point basis. The overall variation was less along the 12.7-mm line than along the centerline, especially with regard to the ID point on the side of the specimen. Up to a plastic stress of approximately 80 MPa (11.6 ksi), contraction ratios along the 12.7-mm line were approximately equal to Poisson's ratio. However, as seen in Fig. 9, such was not the case in the much weaker weld material along the centerline.

In this work, and that reported in Refs. 3 and 5, the welded joint consisted of a relatively weak, very ductile, small volume of filler metal between two relatively strong, less ductile, large volumes of base metal. As the joint is loaded in uniaxial tension, the deformation state is three-dimensional and the material de-

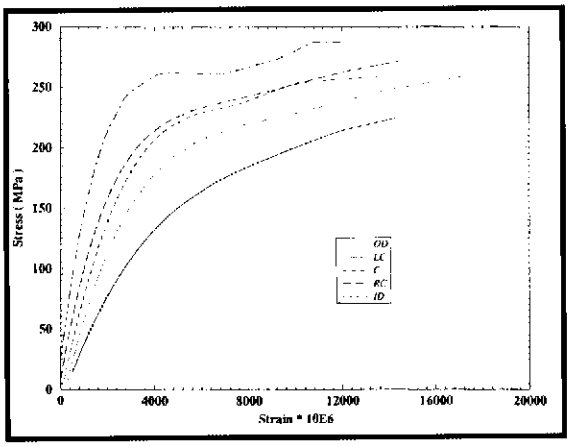

Fig. 7 Material behavior on centerline.

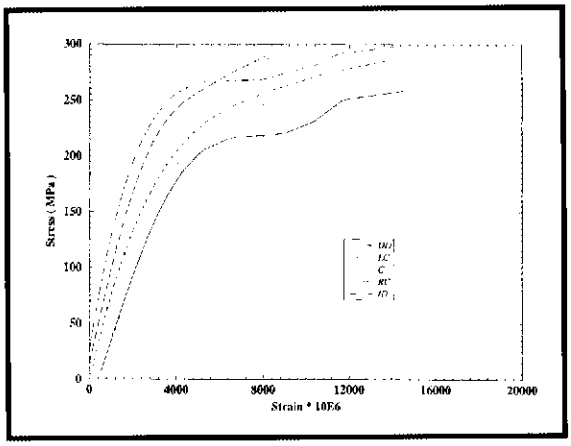

Fig. 8 Material behavior on 12.7-mm line.

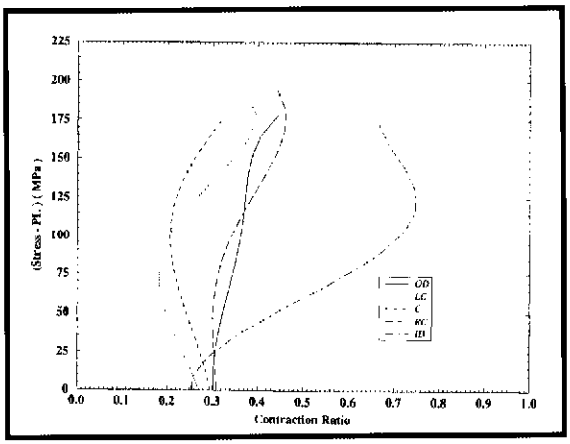

Fig. 9 — Contraction ratios, centerline.

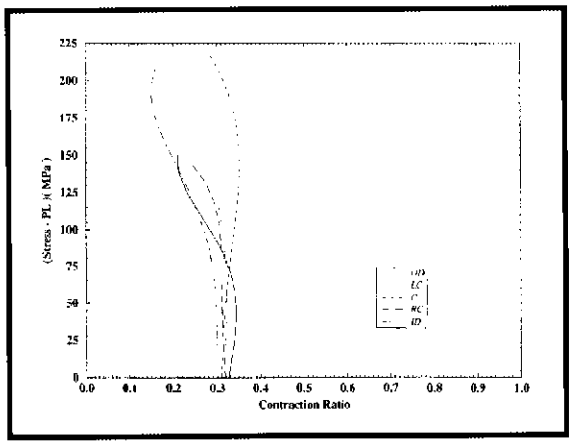

Fig. 10 — Contraction ratios, 12.7-mm line.

forms differently in the two nonaxial, y and z directions — Fig. 2. As the applied stress increases, it is quite visible, even to the naked eye, that deformation of the filler metal in the direction perpendicular to the surface is quite large causing a very large strain in that direction. Such deformation in the welded joint is quite different from that of a homogeneous, isotropic material in uniaxial tension used for Chakrabarty's approximation where $\varepsilon_y = \varepsilon_z = -\alpha\varepsilon_x$ and for which the contraction ratios are equal and approach an upper limit of 0.50. Clearly, values of the contraction ratios calculated using Chakrabarty's approximation are invalid for purposes of constructing a mathematical model of the welded joint. Also, an assumption that the contraction ratio is 0.5 for all plastic deformation or that it varies linearly from Poisson's ratio to 0.5 between the proportional limit and the ultimate stress is invalid.

Since, using available equipment, deformation in the z direction (Fig. 2) could not be measured on a point-by-point basis, actual values for ε_z were not determined. The difficulty in measuring deformation (or strain) perpendicular to a surface, particularly if that surface contains filler metal and heat-affected zones, is well known to all in the measurement field. Therefore, contraction ratios for the three-dimensional deformation state in the welded joint could not be modeled as was done by Chakrabarty for idealized homogeneous, isotropic material.

To indicate variability of data collected from two different specimens, Figs. 11 and 12 show scatter obtained at point C on the centerline and the 12.7-mm line, respectively. Also for comparison, Chakrabarty's approximation (asymptotic to a value of 0.5) for contraction ratios is given for the filler metal (Fig. 11) and the base metal — Fig. 12.

Conclusions

1) Material behavior in thick aluminum welded joints is highly complex, nonuniform, and generally nonlinear on a point-by-point basis.

2) Chakrabarty's approximation for contraction ratios in the plastic range is not valid for modeling the welded joint.

3) An assumption of 0.5 for the contraction ratio for all plastic deformation or that contraction ratios vary in a linear manner from Poisson's ratio to 0.5 between the proportional limit and the ultimate stress is not valid.

4) Along the centerline of the weld, hardness generally increases from the OD side to the ID side. Hardness at locations 12.7 mm and farther from the weld centerline is relatively constant at Rockwell B 73 to 78.

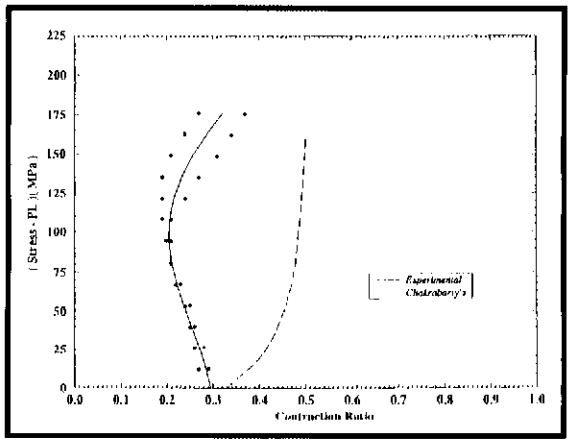

Fig. 11 — Scatter and Chakrabarty's approximation, centerline, point C.

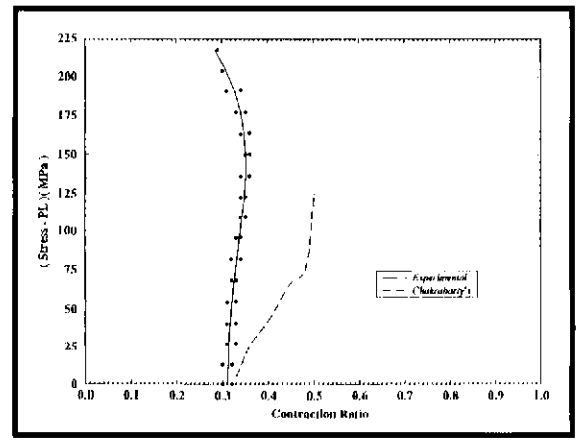

Fig. 12 — Scatter and Chakrabarty's approximation, 12.7-mm line, point C.

Acknowledgment

The authors express their appreciation to the National Aeronautics and Space Administration at the Marshall Space Flight Center for support of the work under contract NAG8293, SUB93-101.

References

1. Burghard, H. G., Jr., and Norris, E. B. 1966. Development of welding techniques and filler metals for high-strength aluminum alloys. Final report, projects 07-1063 and 07-1757, Southwest Research Institute.

2. Verderaime, V. 1989. Weld stresses beyond elastic limit. NASA technical paper 2935. G. C. Marshall Space Flight Center.

3. Gambrell, S. C., Jr. 1992. Use of photostress to characterize the mechanical behavior of welded joints. Final report. Contract No. NAG8-212, SUB92-195, NASA/University of Alabama in Huntsville.

4. Chakrabarty, J. 1987. *Theory of Plasticity*, McGraw Hill, New York, N.Y.

5. Gambrell, S. C., Jr., and Kavikondala, K. 1993. Yield detection in aluminum welded joints using photostress. *Proceedings of the 1993 SEM 50th Anniversary Spring Conference on Experimental Mechanics*, Society for Experimental Mechanics, pp. 653-659.

6. Measurements Group, Inc. 1982. Errors due to Wheatstone bridge nonlinearity. TN-507, Raleigh, N.C.

7. Measurements Group, Inc. 1982. Errors due to transverse sensitivity in strain gauges. TN-509, Raleigh, N.C.