WELDING RESEARCH

SUPPLEMENT TO THE *WELDING JOURNAL*, MAY 1999
Sponsored by the American Welding Society and the Welding Research Council

Strength and Structure of Furnace-Brazed Joints between Aluminum and Stainless Steel

The causes of joint brittleness are investigated and ways to prevent it are suggested

BY M. ROULIN, J. W. LUSTER, G. KARADENIZ AND A. MORTENSEN

ABSTRACT. The structure and shear strength of brazed joints of aluminum to stainless steel are studied using a modification of the double lap joint configuration, which allows mechanical testing and joint microstructure examination on the same test piece.

It is found that during furnace brazing of such joints at 600°C, using an Al-Si eutectic brazing alloy, the interfacial zone between the aluminum-rich braze and the stainless steel substrate features two intermetallic layers. The first is formed in the initial instants of the process and features an overall composition similar to that of the compound $FeSiAl_5$. The second appears after a 10-min hold time at the brazing temperature, and features an overall composition that parallels the $FeAl_3$ intermetallic. Both layers are, however, more complex in structure than is suggested by these stoechiometric relations.

The shear strength of the braze peaks at 21 MPa after a 10-min hold time at the brazing temperature. This peak is associated with nucleation of the second intermetallic layer, which is shown to fragilize the joint significantly. The presence of silicon in the brazing alloy would also seem to be beneficial by retarding formation of this second, more fragile Fe-Al intermetallic layer; however, more work is needed to substantiate this tentative conclusion.

Introduction

Aluminum alloys are commonly joined using standard aluminum-silicon brazing filler metals (Refs. 1, 2). Less commonly known is the fact that many aluminum alloys can also be readily brazed to stainless steel using these same brazing alloys. Common examples of such brazed joints are found in many domestic appliances, such as cooking pans, electrical frying pans, water boilers and heating elements for kettles and washing machines. Other applications in transportation systems and mechanical construction are also emerging.

To braze aluminum to stainless steel, the Al-12Si eutectic filler metal is typically used. When using this filler metal with the well-known noncorrosive eutectic K_3AlF_6-$KAlF_4$ flux (Refs. 1, 3), very high strength joints can be produced when short (1–2 min) brazing times are used. Such joints are, for example, obtained during the induction press brazing of cooking pans; however, when longer heating cycles (>30 min) are encountered, such as those typical for furnace brazing, relatively brittle joints may be formed. In extreme cases, the joints can become so fragile that spontaneous fracture occurs during abusive handling or accidental dropping of brazed parts.

An obvious explanation for such brittle behavior is the formation, for prolonged heating cycles, of intermetallic layers that fragilize the joint (Ref. 4). Indeed, comparison between the joint structure of a commercial, induction-brazed cook pan and a nonoptimally furnace-brazed commercial heating element shows the significantly thicker intermetallic reaction zone observed with the furnace-brazed heating element — Fig. 1. Such correlation between intermetallic growth and reduced braze strength has been established for many brazed materials systems (e.g., Refs. 1, 5, 6), and it is also well known that stainless steel and aluminum react to form intermetallic layers during brazing (e.g., Ref. 7); however, no specific studies have been found concerning the case of present interest. This motivated the present investigation, aimed specifically at addressing joint fragility in furnace brazing of aluminum to stainless steel, and also at defining process conditions for good braze strength.

A parallel series of simple tests of braze strength and structure for furnace-brazed samples was thus conducted, holding all process parameters constant except time. It will be shown that fragilization is associated with the formation of a specific layer of continuous intermetallic, which can be avoided within a reasonable processing-time window.

KEY WORDS

Brazing
Shear Strength
Aluminum
Stainless Steel
Dissimilar Metals
Intermetallic Layer
Microstructure
Filler Metal

Experimental Procedures

A relatively wide variety of specimen configurations have been devised to test brazed or soldered joint strength, featuring varying degrees of tensile or shear loading and varying degrees and types of stress concentration along the joint (Refs. 1, 6–11). There are specific advantages and disadvantages to each of the existent specimen and test designs, and the choice made in each study is generally motivated by a compromise between

M. ROULIN, G. KARADENIZ and A. MORTENSEN are with Laboratoire de Métallurgie Mécanique, Département des Matériaux, Swiss Federal Institute of Technology, Lausanne, Switzerland. J. W. LUSTER is with Castolin S.A., St. Sulpice, Switzerland.

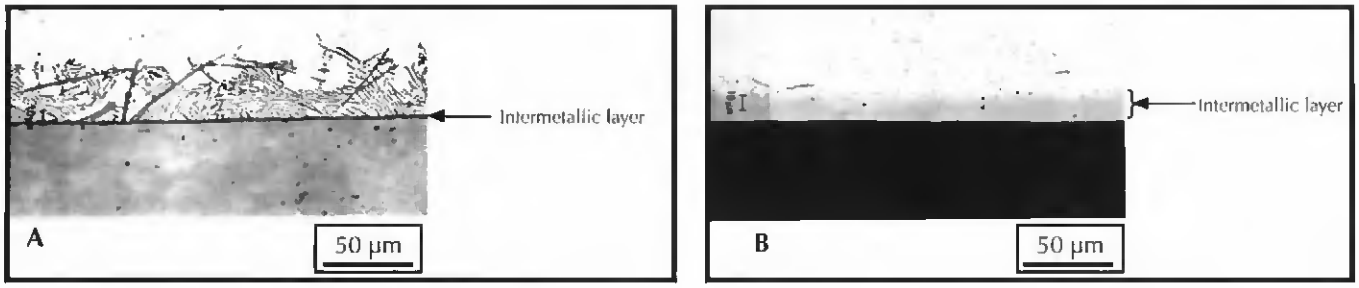

Fig. 1 — Effect of the brazing method on the intermetallic layer thickness in two industrial brazed joints between aluminum and stainless steel. A — Induction-brazed joint from a cooking pan; B — (fractured) furnace-brazed joint from a water boiler.

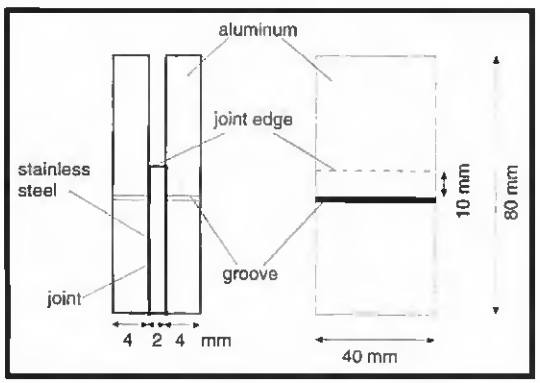

Fig. 2 — Modified double lap joint test piece geometry indicating location of groove separating sheared portion of the brazed joint (upper portion of the joint on the drawing) from the portion used for metallographical characterization (lower portion of the joint on the drawing).

ease of brazing and lack of ambiguity in mechanical test data. A common method is to test braze joints under shear loading, which is a frequently representative loading state for real brazed joints.

For this study, a double lap joint shear test configuration was chosen for ease of processing and also to avoid the significant joint rotation that results from bending moments in single lap joint specimens. This, in turn, minimizes the contribution of tensile stresses to joint failure. The test piece geometry is schematically shown in Fig. 2. It is seen to be relatively standard, being based on the use of three rectangular metal pieces; however, its preparation procedure was somewhat unconventional in that it included an additional machining step after brazing. This machining step, by which a portion of the brazed joint was isolated from the applied shear stress, was designed to preserve an unstressed portion of the joint for post-test metallographic observation. Using this procedure, both mechanical testing and microstructural analysis could be carried out on the same brazed specimen.

The test pieces were produced using commercial 4-mm-thick 99.5% purity aluminum wrought plates and commercial 2-mm-thick X2CrNi1B/9 stainless steel wrought plates. The brazing material was a commercial paste (BP38512, Eutectic+Castolin) consisting of eutectic Al-12Si filler alloy powder mixed with a noncorrosive flux and an inert binder. The binder evaporates at about 150°C (423 K), the flux melts at about 560°C (833 K) and the melting temperature range of the filler alloy is 573–584°C (846–857 K) (Castolin S.A. Technical Data Sheet, BP38512).

After cutting and edge smoothing, the plates were degreased using ethyl-alcohol. The brazing paste was uniformly spread on the aluminum side of the two surfaces to be brazed. The quantity of paste was kept constant at 4.2–4.3 g/dm^2 per side on each side. Finally, the plates were carefully assembled, with the plates resting one over the other during the brazing cycle. Hence, the joint clearance is determined by hydrostatic and capillary forces and tends to self-regulate at a relatively constant value for fixed brazing conditions (Ref. 1).

Before brazing, the binder was evaporated using a hot air dryer. Brazing was conducted under a controlled reducing atmosphere (95% N_2 + 5% H_2) in a chamber furnace. The temperature was controlled using a K-type thermocouple situated on the test piece surface. The brazing cycle is shown in Fig. 3. Test pieces were heated to the brazing temperature of 600°C (873 K), then left in the furnace for a variable holding time at the brazing temperature, and finally cooled. The heating and cooling rates were fixed by the thermal conductivity of the system. Various values of the holding time (0, 5, 10, 20, 40 and 60 min) were explored to vary the intermetallic layer thickness.

As indicated above, a groove 1 mm wide and 4 mm deep (corresponding to the aluminum plates' thickness) was cut after brazing using a circular saw blade installed on a milling machine at a distance of 10 mm from the brazed joint edge, as shown in Fig. 2. This groove allows for testing of the brazed joint in shear over a 10 x 40 mm surface by tension loading of the test piece. The maximum shear load before sample failure was recorded and divided by the joint surface to derive the average joint strength in shear. Since joints such as these feature a certain level of stress concentration at their ends (Ref. 11), the data recorded are considered specific to the present test specimen geometry; however, the data still correspond predominantly to shear loading. The rest of the joint is not significantly affected by the mechanical test, which made it possible to sample the as-brazed interface for microstructural examination using optical and scanning electron microscopy.

Brazed joint microanalysis was carried out using optical metallography, and scanning electron microscopy including energy dispersive X-ray analysis (EDX). In optical microscopy, Keller's reagent (5 ml HNO_3 + 3 ml HCl + 2 ml HF + 200 ml H_2O) was used.

Results

Microstructural examination of the interface reveals the formation of two distinct layers of intermetallic compounds along the interface between the aluminum and stainless steel — Fig. 4. Microhardness indentation shows that both layers feature very high hardness (above 600 HV); therefore, these have the potential for embrittling the joint. Besides these intermetallic layers, pores were found at various locations and in variable quantities along the interface; these were also visible on fracture surfaces and frequently contained crystallized fluxing compounds. The structure of the braze metal layer itself is fully eutectic for a nominally zero holding time at the brazing temperature. As holding time increases, the microstructure of the braze

layer displays an increasing amount of cellular primary aluminum solidification, together with gradual replacement of eutectic silicon second phase with various intermetallics precipitated from the melt upon joint solidification.

The first interfacial intermetallic layer grows between the filler metal alloy and the stainless steel (Fig. 4A) and begins forming during the heating cycle before the braze melts. At a nominally zero holding time, it is already more than 4 μm thick, and its thickness increases with increasing holding time. The second intermetallic layer forms between the first intermetallic layer and the stainless steel substrate, and is only detected for holding times longer than 10 min. This second intermetallic forms a discontinuous layer consisting of isolated particles for a holding time of 10 min (Fig. 4B) and becomes continuous for longer times — Figs. 4C and D.

The square of the thickness of both layers increases linearly with increasing holding time for times exceeding 5 to 10 min, as shown in Fig. 5. This result suggests that growth of both intermetallic layers is governed, after this "incubation" time, by diffusion of reacting species through the layers.

The interpretation of the EDX spectra reveals that the first intermetallic layer contains principally Fe, Al and Si (Table 1). The relative atomic proportion of these elements suggested by the EDX spectra lies near the $FeSiAl_5$ stoechiometry, with additional traces of Cr; we call this layer the Fe-Si-Al layer in what follows. The second intermetallic layer contains predominantly Fe and Al elements in relative proportion near the stoechiometry of $FeAl_3$; we thus designate this layer the Fe-Al layer in what follows. Additionally, this latter layer contains secondary quantities of Ni, Cr and Si.

These two different intermetallic layers clearly play a role in the fracture process of the brazed joints, as shown in Table 2, which compares intermetallic layer thicknesses measured 1) in the nontested portion of the joint and 2) on the sample fracture surfaces after the mechanical test. These measurements reveal that brazed joints break, on average, along the Fe-Al intermetallic layer for times exceeding 10 min, and along the interface between the Fe-Si-Al intermetallic layer and stainless steel for shorter times, before growth of the Fe-Al intermetallic into a continuous layer.

The shear strength of brazed joints is found to exhibit some scatter, together with a dependence of average strength on the holding time, *i.e.*, on the intermetallic layer thickness and nature — Fig. 6. As seen on this figure, there is an optimum in the average measured braze strength for a holding time of 10 min.

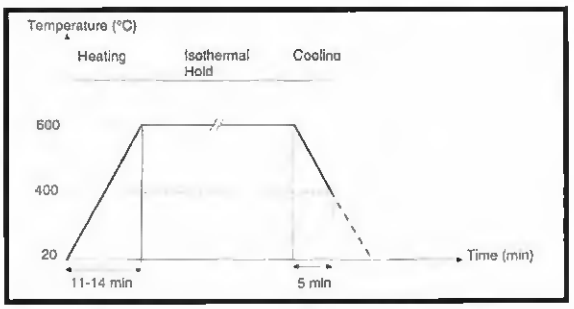

Fig. 3 — Sketch of time-temperature profile for furnace brazing cycle.

Discussion

A limited amount of entrapped flux and porosity was observed in the experimental joints. This could indicate that either the amount of filler metal was insufficient (Ref. 1) or, alternatively, that the joint clearance was too wide (Ref. 7). Efforts to reduce these effects by either applying more paste or applying pressure on the plates to reduce joint thickness resulted in no visible improvement in joint quality. Clearly identifiable shrinkage pores were also visible along the interface. Measurements of the total wetted surface were in excess of 85%, which indicates that all joints were industrially sound brazes.

Both intermetallic layers formed along the brazed joints feature a complex structure. In particular, at longer times it is apparent that the first Fe-Si-Al layer features a gradient in structure from the alu-

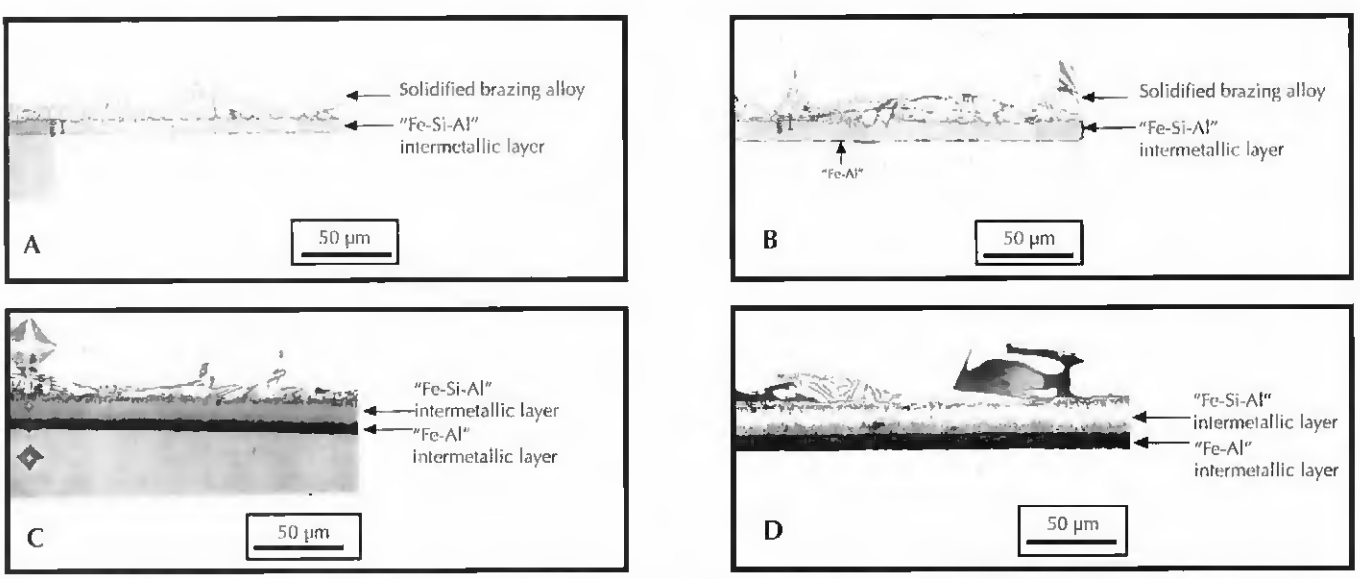

Fig. 4 — Microstructure of furnace brazed joints. A — Five-minute holding time, showing formation of the first (Fe-Si-Al) layer and the still near-eutectic composition of the solidified liquid braze; B — 10-min holding time, showing increased thickness of the first (Fe-Si-Al) layer, together with nucleation of the second (darker, Fe-Al) layer at the interface between the first layer and the stainless steel substrate; C — 40-min holding time, showing growth of the first (Fe-Si-Al) layer, coalescence and growth of the second (Fe-Al) layer, a crack running through the second (Fe-Al) layer (cracks were at times also found in the first layer) and hardness indentations indicating the greater hardness of both interfacial reaction layers compared with both substrates; D — 60-min holding time, showing further growth of both layers, the graded structure of the first (Fe-Si-Al) layer and the two-phase structure of the second (Fe-Al) layer. Above the two intermetallic layers, the solidified brazing alloy shows large (dark) intermetallic precipitates.

Table 1 — Elemental Distribution in Reaction Layer and Stainless Steel Substrate, According to Energy Dispersive X-ray Analysis

Elemental (at.-%)	Al	Si	Fe	Cr	Ni
First (Fe-Si-Al) Intermetallic Layer	72	12.5	11.5	3.5	0.5
Second (Fe-Al) Intermetallic Layer	70	4.0	18.5	5.0	2.5
Stainless Steel Substrate	1.0	1.5	70	19	8.5

Table 2 — Intermetallic Layer Thickness Measured before and after Mechanical Test as a Function of Holding Time

Holding Time (mn)	Intermetallic Layer	Layer thickness (µm)	Residual Reaction Zone Thickness Measured on the Al Fracture Surface (µm)
0	Fe-Si-Al	4	5
0	Fe-Al	(not present)	
5	Fe-Si-Al	14	15
5	Fe-Al	(not present)	
10	Fe-Si-Al	14	14
10	Fe-Al	2 (discontinuous)	
20	Fe-Si-Al	19	22
20	Fe-Al	4	
40	Fe-Si-Al	21	23
40	Fe-Al	8	
60	Fe-Si Al	27	31
60	Fe-Al	9	

Average from four measurements each; standard deviation varied from 1 to 2 µm.

minum-rich braze layer to the second intermetallic layer (this gradient is clearly discernible in the thickest layer produced — Fig. 4D). The second Fe-Al layer displays a structure that seems multiphased. Description of these layers in terms of average intermetallic compositions $FeSiAl_5$ and $FeAl_3$, respectively, is thus a strong oversimplification.

The formation of intermetallic layers has been observed at the interface between stainless steel and aluminum in composites produced by melt infiltration or by solid-state hot-pressing (Refs. 12–16), in Al-clad 430 stainless steel foils after solid-state homogenization heat treatments (Ref. 17), and also in a recent study of brazing of aluminum to stainless steel (Ref.18). Hwang, *et al.*, provide a detailed study of reaction kinetics during solid-state diffusion brazing between 304 stainless steel and 1100 aluminum (Ref.16), the findings of which are interesting to compare with present data as follows:

1) In agreement with the present work (for times exceeding 5 to 10 min), growth of the reaction layer was found to be parabolic, and the parabolic growth rate constant measured by these authors at 600°C is identical to that measured here for the growth kinetics of the first (Fe-Si-Al) interfacial layer at times in excess of 5 min ($k = 1.5 \cdot 10^{-13}\ m^2 \cdot s^{-1}$).

2) Also in agreement with the present study, Hwang, *et al.*, found that the internal structure of the reaction layer is complex, showing a gradient in structure and composition on traveling from the stainless steel to the aluminum. It was suggested by these authors that the interfacial layer formed in their experiments comprises spatially varying quantities of $Fe(Cr, Ni)Al_2$, $Fe(Cr, Ni)Al_3$ and $(Fe, Cr, Ni)_2Al_7$ phases.

3) In the composites of Hwang, *et al.*, on the other hand, there was only a single interfacial layer formed, the composition of which, measured by EDX, was found, save for the 4% silicon, to approach more closely that of the second (Fe-Al) layer of the present work.

This comparison thus leads to the conclusion that the rate-limiting step in growth of the layers must be the same in both studies, namely diffusion of reacting species through a layer that is present in both systems. The higher growth rate measured here at shorter times (under about 5 min), together with the similarity in composition between the second (Fe-Al) layer of the present experiments and reaction layers observed by Hwang, *et al.*, provide an indication that it is diffusion through this second layer that limits the rate of reaction once it forms. This would, in turn, imply that the activation energy Q for the parabolic constant k in the vicinity of 600°C in the present system must be the same as that found by Hwang, *et al.*, namely $Q = 152\ kJ\ (mole)^{-1}$. The complexity of the reaction layer structure in both studies precludes pushing the comparison further; however, it is interesting that delayed formation of a two-layer structure, and the initially rapid Fe-Si-Al layer growth found here, were not detected in the absence of silicon by Hwang, *et al.* This, in turn, would indicate that it is the presence of silicon in the brazing alloy that delays nucleation of the second layer.

The scatter in measured

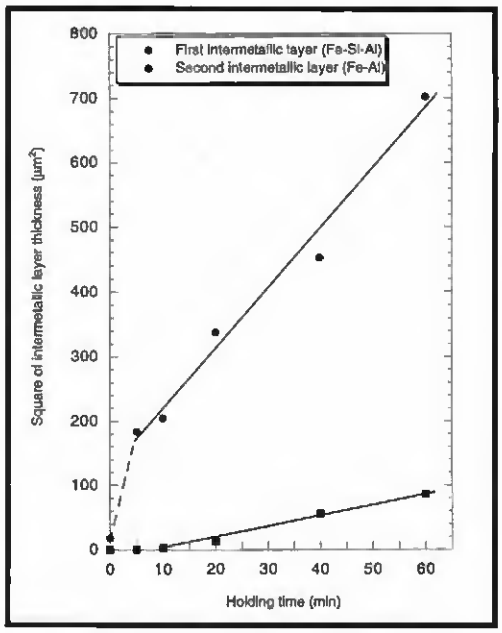

Fig. 5 — Square of intermetallic layer thickness vs. holding time.

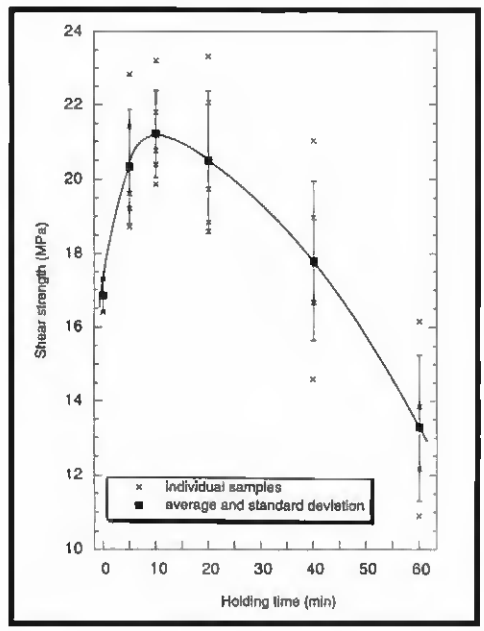

Fig. 6 — Shear strength vs. holding time.

brazed joint strength values can be ascribed to voids and entrapped flux along the braze. These represented from 5 to 15% of the fracture surfaces; however, no clear relationship was found between void fraction or void size and measured bond strength. The peak shear strength value measured in the present work of 21 MPa is broadly consistent with the range of values measured by Lugscheider, *et al.* (15–30 MPa tensile strength) (Ref.18).

Comparing Figs. 5 and 6 shows that the decrease in shear strength for holding times above 10 min correlates well with the formation and growth of the second (Fe-Al) intermetallic layer, indicating that this layer is responsible for the observed poor mechanical properties of furnace-brazed parts after long heating cycles. This is confirmed by the analysis of the fracture surfaces (Table 2), which shows that fracture occurs predominantly in this second intermetallic layer. On the other hand, the reason for the decrease in shear strength for decreasing time at short holding times (less than 10 min) is less clear.

Combining this conclusion with the previous observation that formation of the second (Fe-Al) layer is probably delayed by the presence of silicon in the melt suggests this element is beneficial not only in lowering the brazing temperature (thus slowing reaction kinetics), but also in that it seemingly alters the reaction path between aluminum and stainless steel in the early stages of contact. This tentative conclusion would imply that high-strength brazes between aluminum and stainless steel are, in fact, made possible by the presence of this element; however, it would require further work to rest on firm ground.

Conclusion

- The structure and shear strength of brazed joints can be studied in a single set of samples using a modification of the double lap joint configuration.
- During furnace brazing of aluminum/(X2CrNi18/9) stainless steel joints at 600°C using an Al-Si eutectic brazing alloy, the interfacial zone between the aluminum-rich braze and the stainless steel substrate features two intermetallic layers. The first is formed in the first instants of the process and has an overall composition roughly similar to that of the compound $FeSiAl_5$. The second appears after a 10-min hold at the brazing temperature and features an overall composition that parallels the $FeAl_3$ intermetallic. Both layers are more complex in structure than is suggested by these stoechiometric relations, featuring several phases and microstructural gradients. Both layers grow after the first 10 min of the brazing cycle in accordance with the parabolic rate law. By comparison with published data gathered on 1100 aluminum/304 stainless steel solid-state diffusion couples, it would appear that formation of the second (Fe-Al) layer is delayed by the presence of silicon in the braze, and that the rate of layer growth is controlled by diffusion through this second (Fe-Al) layer once it has formed.
- The shear strength of the bonds peaks at 21 MPa after a 10-min hold time at the brazing temperature. This peak is associated with growth of the second intermetallic layer into a continuous layer, which is thus shown to fragilize the joint significantly.
- A practical implication of this work is that strong joints between stainless steel and aluminum via furnace brazing can be produced using a eutectic Al-Si brazing alloy provided brazing times are kept sufficiently short to avoid formation of the second, more fragile (Fe-Al) intermetallic layer. At a brazing temperature of 600°C, brazing times should remain less than approximately 10 min. Care and process control are, thus, required for success in the process; however, we note that 10 min represent a sufficient time window for viable industrial application of the furnace brazing process to join aluminum with stainless steel.

References

1. Humpston, G., and Jacobson, D. M. 1993. *Principles of Soldering and Brazing*, pp. 18, 19, 50–52, 160–162, ASM International, Materials Park, Ohio.

2. Boyer, H. E., and Gall, T. L., eds. 1985. *Metals Handbook*, Desk Edition, pp. 30–70 to 30–71, American Society for Metals, Materials Park, Ohio.

3. Cooke, W. E., Wright, T. E., and Hirschfield, J. A. 1978. Furnace Brazing of Aluminum with a Non-Corrosive Flux. SAE Technical Paper Series, Paper No. 780300.

4. Altschuller, B., Dickerson, P. B., and Heflin, R. L. 1990. *Aluminum Brazing Handbook*, 4th Ed., p. 65, The Aluminum Association, Washington D.C.

5. Dirnfeld, S. F., and Ramon, J. J. 1990. Microstructure investigation of copper-tin intermetallics and the influence of layer thickness on shear strength. *Welding Journal* 69 (10): 373-s to 377-s.

6. Takeshita, K., and Terakura, Y. 1998. A novel approach for predicting the tensile strength of brazed joints. *Metall. Mater. Trans.*, 29A (2): 587–592.

7. *Brazing Manual*. 1975. American Welding Society, Miami, Fla.

8. Ramon, J. J., and Dirnfeld, S. F. 1988. A practical way to measure the strength of small soldered joints. *Welding Journal* 67(10): 19–21.

9. Shawski, G. S. A., and ElSabbagh, A. A. S. 1975. Shear strength of brazed and soldered joints. *Welding Journal* 54 (8): 276-s to 279-s.

10. ISO. 1985. *Welding and Allied Processes — Assemblies Made with Soft Solders and Brazing Filler Metals — Mechanical Test Methods*, Norm No. ISO-5187.

11. Dolgov, Y. S., and Sidokhine, Y. F. 1977. *La Formation du Joint Brasé* (translated from Russian by C. Lévy) p. 143. Publications de la Soudure Autogène, Paris, France.

12. Colin, C., Marchal, Y., Boland, F., and Delannay, F. 1993. Stainless steel fiber reinforced aluminium matrix composites processed by squeeze casting: relationship between processing conditions and interfacial structure. *J. de Physique* IV (Suppl. to *J. de Physique* III), 3 (C7): 1749–1752.

13. Delannay, F., Colin, C., Marchal, Y., Tao, L., Boland, F., Cobzaru, P., Lips, B., and Dellis, M.-A. 1993. Processing and properties of metal matrix composites reinforced with continuous fibres for the control of thermal expansion, creep resistance and fracture toughness. *J. de Physique* IV (Suppl. to *J. de Physique* III), 3 (C7): 1675–1684.

14. Bhagat, R. B. 1989. Growth kinetics of interface intermetallic compounds in stainless steel fibre reinforced aluminium matrix composites. *J. Mater. Sci., pp.* 1496–1502.

15. Baron, R. P., Wert, J. A., Gerard, D. A., and Wawner, F. E. 1997. The processing and characterization of sintered metal-reinforced aluminium matrix composite. *J. Mater. Sci.* 32: 6435–6445.

16. Hwang, J. H., Horng, C. F., Lin, S. J., Liu, K. S., and Jahn, M. T. 1997. Interface study for stainless steel fibre-reinforced aluminium matrix composite. *J. Mater. Sci.* 32: 719–725.

17. Tortorici, P. C., and Dayananda, M. A. 1998. Phase formation and interdiffusion in Al-clad 430 stainless steels. *Mater. Sci. Eng.* 244: 207–215.

18. Lugscheider, E., and Schlimbach, K. 1998. Flußmittelfreies Löten von Aluminium und Cr-Ni Stahl. Hart- und Hochtemperaturlöten und Diffusionschweißen. *Proc. Conf. Brazing, High Temperature Brazing and Diffusion Welding*, Aachen, pp. 191–195, German Welding Society (DVS).

REPRINTS REPRINTS

To Order Custom Reprints of Articles in the

Welding Journal

Call Denis Mulligan at (800) 259-0470

REPRINTS REPRINTS