Advances in Oxygen Equivalent Equations for Predicting the Properties of Titanium Welds

Oxygen equivalent equations were developed to improve the relationships between the factors that control strength, ductility and hardness of CP titanium welds

D. D. HARWIG, W. ITTIWATTANA AND H. CASTNER

ABSTRACT. This investigation was undertaken to improve the relationships between the factors that control strength, ductility and hardness of commercially pure (CP) titanium welds. New oxygen equivalent equations were developed by using statistical regression analysis on data from mechanical property tests removed from single-pass, autogenous welds. A range of weld compositions were produced by alloying the gas tungsten arc weld pools on Grade 2 material with shielding gases that had small additions of air or CO_2. The investigation evaluated the effects of cooling rate, interstitial element (carbon, hydrogen, oxygen and nitrogen) content and iron content.

Three cases were used during the regression analysis to determine which factors were needed to relate weld properties. The best oxygen equivalent (OE) equation correlation was obtained using Case 1, which related all the factors — oxygen, nitrogen, carbon, hydrogen, iron and cooling rate — to weld properties. A series of Case 2 analyses generated separate OE equations that related the effects of primary factors — oxygen, nitrogen, carbon and iron — to each individual weld property. These equations made small improvements in the correlation coefficients compared to a single equation. The third case used a single OE equation that related the effects of the primary factors. The relationships developed during this work show that Rockwell B hardness measurements can be used to assess the quality of CP titanium welds.

Introduction

Commercially pure (CP) titanium is strengthened by the interstitial elements oxygen, nitrogen and carbon, as well as by the solid solution strengthening element, iron. The ASTM specification composition limits and mechanical property requirements for the four grades of CP titanium are shown in Table 1. The primary difference between these grades is the oxygen content that acts as the primary strengthener. Hydrogen is also typically present in CP titanium as an impurity at less than 50 parts per million (ppm). Commercially pure titanium has small iron additions, which are reported to increase strength and improve resistance to hydride embrittlement (Refs. 1, 2). The effects of iron content on the properties of titanium weld metal had not been reported in the literature. Iron is a beta stabilizer and promotes globules of retained beta in the alpha titanium matrix. Since beta globules must be minimized to optimize the corrosion resistance of CP titanium, the maximum ASTM specification iron content for Grade 2 titanium is 0.30 wt-%. It has been the experience of the researchers that many commercial heats of Grade 2 titanium typically have an iron content in the range between 0.03 and 0.11 wt-% and an oxygen content range of 0.10– 0.15 wt-%.

In 1955, Ogden and Jaffee (Ref. 3) developed an OE equation based on their study of binary alloys between titanium and oxygen, nitrogen or carbon. Their OE equation is as follows:

$$OE = O + 2N + \tfrac{2}{3}C \text{ wt-\%}$$

Figure 1 shows how this equation relates the combined effects of oxygen, nitrogen and carbon to an equivalent amount of oxygen and to the hardness of wrought titanium. The equation shows the effect of nitrogen on hardness is twice as potent as oxygen, and the effect of carbon is only two-thirds as potent as oxygen.

The OE equation Ogden and Jaffee developed has been applied to evaluate the properties of titanium weld metal in several earlier investigations (Refs. 4–6). These investigations studied single-pass gas tungsten arc (GTA) welds with different levels of oxygen, nitrogen and carbon that were made by adding small percentages of either air or CO_2 to the argon torch shielding gas. This experimental technique increased the interstitial content and through-thickness mechanical properties of full-penetration welds made in CP titanium sheet. Longitudinal weld metal tensile tests were used to evaluate weld strength and ductility. These properties were then related to the above OE formula. Two levels of thickness of titanium sheet and welding procedures with different weld metal cooling rates were used in prior investigations (Refs. 4, 5). This work appeared to show that welds using cooling rates of 10 and 15°C/s resulted in different levels of strength, ductility and hardness as a function of OE. Cooling rate is known to affect the cast grain size of weld metal and is believed to have an effect on weld properties since the properties of wrought titanium are affected by grain size and obey the Hall-Petch relationship (Ref. 7). It was also believed other factors, such as iron content, may also have influenced the weld properties. Therefore, further work was required to determine if cooling rate is a significant factor and to evaluate the effects of other factors, such as hydrogen and iron content, on the properties of titanium welds.

The present investigation was performed to develop an improved OE relationship that could be used to reliably predict the properties of CP titanium welds. The work includes an evaluation

KEY WORDS

Commercially Pure Titanium
Oxygen Equivalent Equations
GTAW
Regression Analysis
Cooling Rate
Interstitial Element Content
Iron Content

D. D. HARWIG, W. ITTIWATTANA and H. CASTNER are with Edison Welding Institute, Columbus, Ohio.

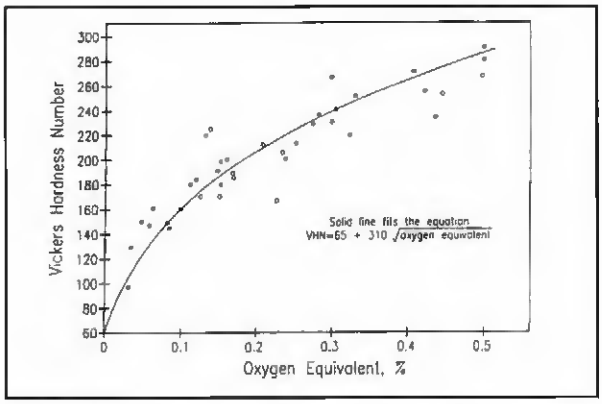

Fig. 1 — Effect of total interstitial content, expressed in terms of an OE, on the hardness of CP titanium base material (Ref. 1).

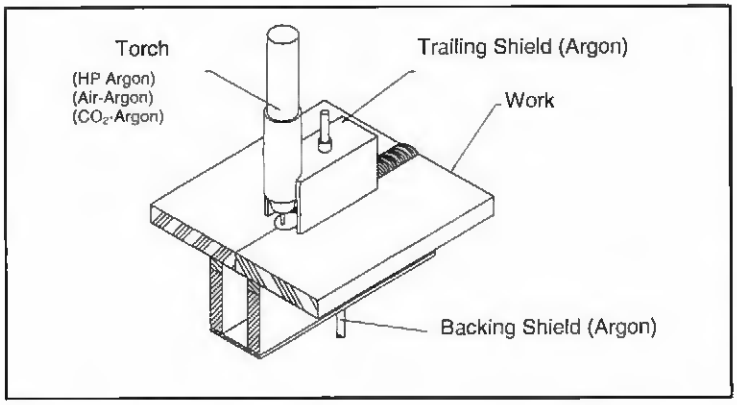

Fig. 2 — Setup for titanium weld tests.

of the effects of higher cooling rates, hydrogen and iron content on weld properties. A structured regression analysis was performed to develop a series of new OE equations under different conditions to improve the relationships between alloy content and CP Grade 2 titanium weld properties. This regression analysis was based on the data developed in the prior investigations (Refs. 4, 5) and on the new data that was developed in this investigation. Finally, the work evaluated whether the relationship between weld hardness and OE can be used to predict the properties of CP titanium welds and support development of nondestructive methods that can assess weld contamination.

Experimental Procedure

The work focused on Grade 2 titanium, which is commonly preferred in welding applications requiring good strength, ductility and corrosion resistance. A series of full-penetration GTA welds was made on the five heats of CP Grade 2 titanium, as shown in Table 1. Three heats were sheet and two heats were pipe material. Weld test coupons made from sheet were 24-in. (609.6-mm) long and were sheared parallel to the rolling direction. Full-penetration welds were made along the longitudinal axis of 12-in. (304.8-mm) sections of pipe to provide test specimens from the pipe heats. The heat of 4-in. pipe was selected to provide a higher iron content compared to the sheet specimens and the heat of 2-in. pipe specimens. The 4-in. (101.6-mm) Schedule 10 had 0.11 wt-% iron content and the 2-in. (50.8-mm) Schedule 10 pipe had 0.03 wt-% iron.

The welding tests were made using argon shielding gases in the welding torch that had low levels of either air or carbon dioxide (CO_2) added. This test technique resulted in weld beads of fairly uniform hardness through the weld section, indicating complete mixing of the interstitial elements added. The composition of these gases is shown in Table 2. Both air and CO_2-argon shielding gases were used to systematically increase the oxygen (O) and nitrogen (N) or oxygen and carbon (C) content to provide a controlled range of weld metal compositions. Up to ten test conditions were evaluated on each heat of material by changing the torch shielding gas. These shielding gases in combination with the different heats of material and welding parameters provided 39 different weld metal compositions that were tested to determine mechanical properties. An additional 24 welds were made on sheet and pipe and used for weld metal hardness testing.

The GTAW process was used to make the test welds — Fig. 2. Welding parameters are shown in Table 3. Full-penetration bead-on-plate welds were made on each heat of titanium in the flat position. All welding tests were made with a trailing shield attached to a No. 12 torch shield cup. The majority of weld tests were clamped in a weld fixture that provided argon gas backing. This fixture had a 2-in.-wide (50.8-mm) opening along the center of the weld and provided no forced cooling to the weld metal. The cooling rates measured using this fixture were 10 to 15°C/s depending on the sheet thickness and welding parameters (Table 3). High cooling rate (CR) tests were performed using a water-cooled copper fixture that sandwiched the sheet

Table 1 — Data on Five Heats Used in This Investigation

Ti Grade	Nitrogen max. (wt-%)	Carbon max. (wt-%)	Oxygen max. (wt-%)	Hydrogen max. (wt-%)	Iron max. (wt-%)	Ultimate Stress min. (ksi)	Yield min. (ksi)	Elongation min. (%)
Grade 1 (CP Ti)	0.03	0.08	0.18	0.015	0.20	35	25	24
Grade 2 (CP Ti)	0.03	0.08	0.25	0.015	0.30	50	40	20
Grade 3 (CP Ti)	0.05	0.08	0.35	0.015	0.30	65	55	18
Grade 4 (CP Ti)	0.05	0.08	0.40	0.015	0.50	80	70	15
Heat No. 452141 0.079 in. thick, Gr. 2	0.013	0.009	0.10	0.0010	0.07	69.1	46.2	27
Heat No. 420053 0.118 in. thick, Gr. 2	0.007	0.01	0.15	0.0019	0.03	73.1	48.6	28
Heat No. 455273-03 0.125 in. thick, Gr. 2	0.007	0.012	0.11	0.0013	0.07	73.6	48.8	24
Heat No. R3562 4-in. Sch. 10 pipe x 0.118 in.	0.014	0.01	0.14	0.004	0.11	86.4	53.2	27
Heat No. 879391 2-in. Sch. 10 pipe x 0.105 in.	0.0038	0.0032	0.143	0.0009	0.033	71.2	47.0	30

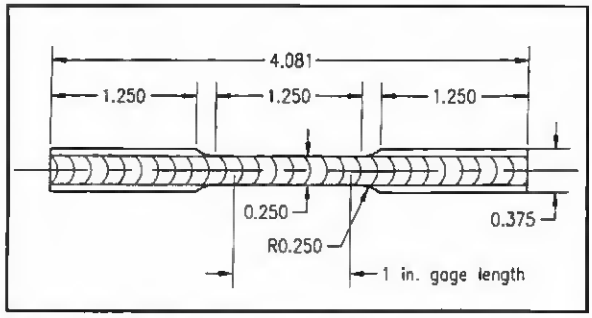

Fig. 3 — Longitudinal tension test specimen.

specimen. The copper fixture had a root opening of ⅛ in. (67.6 mm) and a copper jaw spacing of ⅝ in. (15.8 mm) on the weld face to maximize the cooling. This fixture increased the cooling rate from 10 to 28°C/s on the welds made on the 0.118-in.-thick (3-mm) sheet with the welding parameters shown in Table 3.

Weld cooling rate was measured by injecting a tungsten-rhenium type C thermocouple, which was 0.020 in. (0.5 mm) diameter into the weld pool of a weld test. The cooling rate was determined between the temperature range of 500–800°C (932–1472°F). After welding, the weld assemblies were then sectioned into test specimens. The cooling rates measured in these tests were believed to be representative of manual and mechanized GTAW on single-pass, full-penetration applications.

Prior to making each weld, the titanium base materials were thoroughly cleaned using acetone and lint-free paper towels. Surface oxides were removed by brushing with an electric power tool equipped with a clean, stainless steel wire brush that was used only on titanium. The weld joint area and weld fixture surfaces were again wiped with acetone before each weld was made. Each day, prior to welding, a 5 to 10 ft³/h argon purge was applied for at least 30 min and maintained on the gas lines for both the torch and trailing shield gases to remove moisture. The argon back purge required a 20 to 1 dilution by volume before welding to assure a pure argon gas environment. A root bead width criterion of 0.25-in. (6.35-mm) minimum was used in parameter development to permit the removal of all weld metal tensile specimens.

Two or three longitudinal weld metal tensile specimens were removed from each weld. The dimensions of these specimens are shown in Fig. 3. The 0.25-in. (6.35-mm) root bead width criteria assured that the gauge section of each lon-

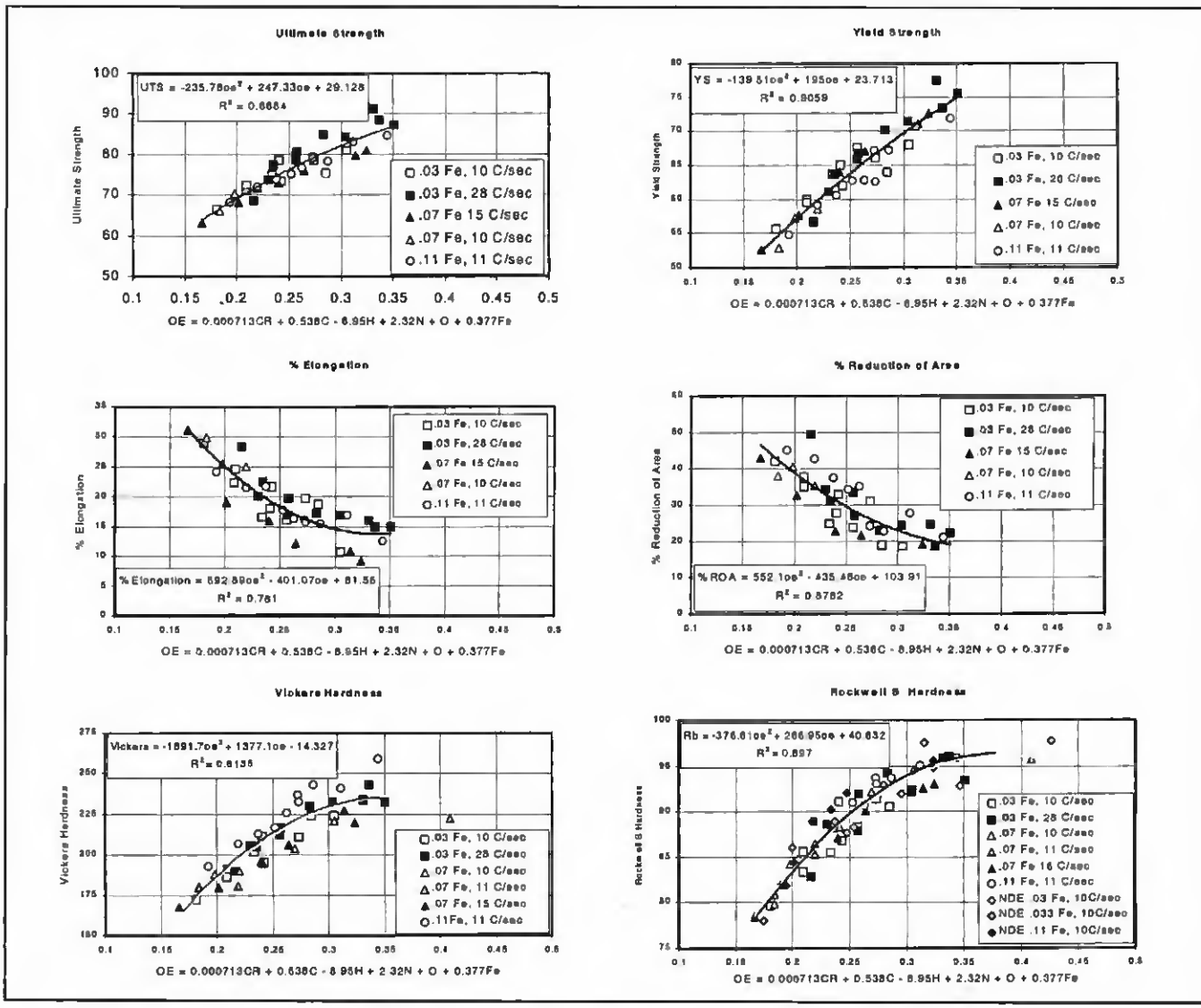

Fig. 4 — OE relationships for Case 1; all factors, general equation for all properties.

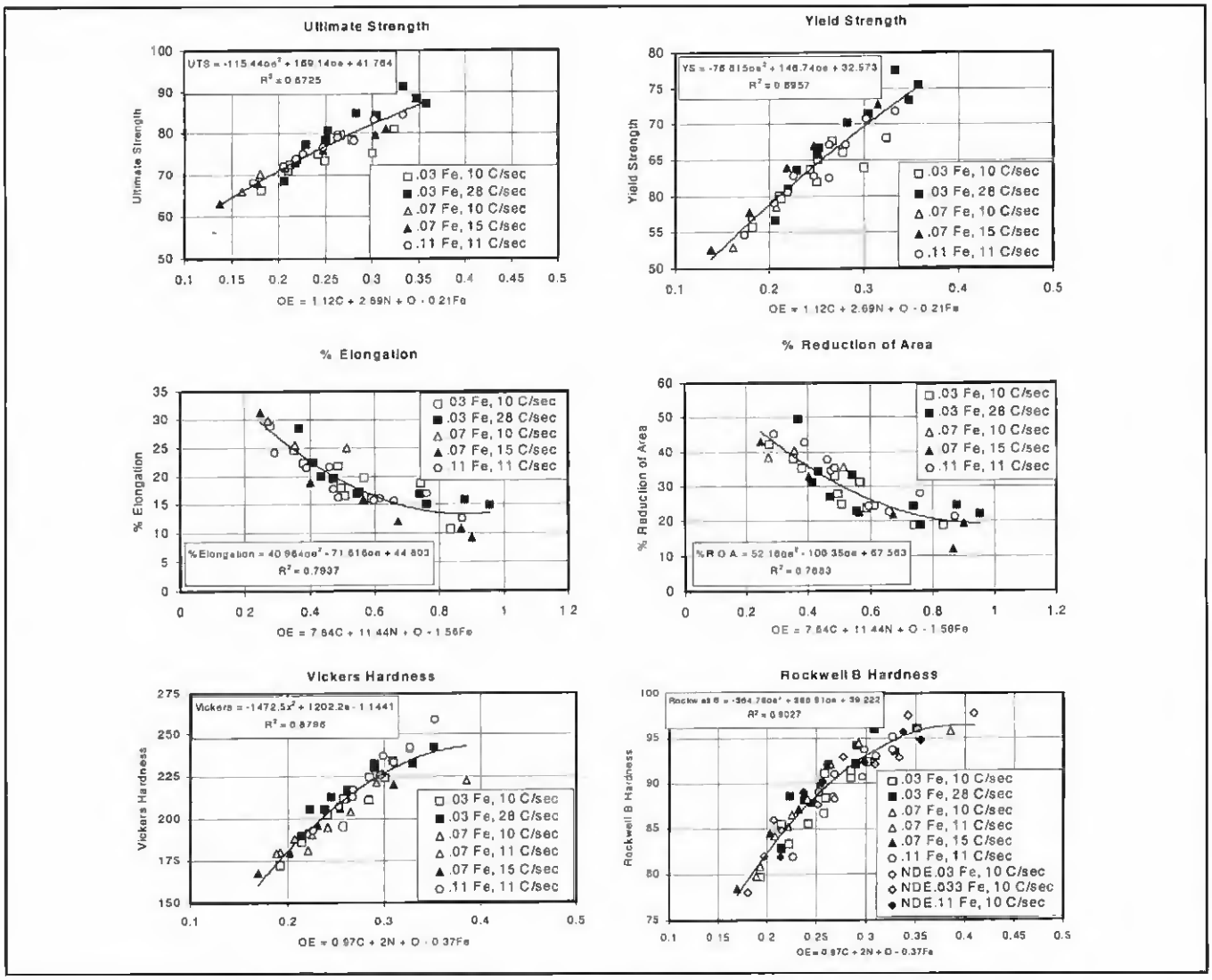

Fig. 5 — OE relationships for Case 2; primary factors, separate equation for each property.

Table 2 — Shielding Gas Test Matrix Used For GTAW Welds

Torch Shielding	Trailing Shield	Backing Shield
High-Purity (HP) Argon	Argon	Argon
Air-Contaminated Argon Mixtures	Argon	Argon
–0.21% air		
–0.43% air		
–0.60% air		
–0.79% air		
–0.97% air		
CO_2-Contaminated Argon Mixtures	Argon	Argon
–0.26% CO_2		
–0.52% CO_2		
–0.77% CO_2		
–1.00% CO_2		

gitudinal tensile specimen contained all cast weld metal. The tensile specimens were tested with the face and root surfaces of the weld left in the as-welded condition. The edges of each tensile specimen were milled flat. The tensile tests were performed to ASTM E8 using a displacement rate of 0.05 in./min (0.02 mm/s).

Specimens were also removed from the welds for Vickers microhardness testing, Rockwell B macrohardness testing, metallographic analysis and interstitial composition analysis. Microhardness and metallographic cross sections were prepared by mounting the specimens in bakelite and polishing them with up to 4000-grit sandpaper. A final polish was then performed using a colloidal silica suspension on an automatic cloth wheel. This step was repeated until all of the scratches were removed. The specimens were then etched using a mixture of 88% distilled water, 10% hydrogen peroxide and 2% hydrofluoric acid. Vickers microhardness measurements were taken using a load of 500 g for 15 s on a mounted cross section. An average Vickers microhardness was calculated from nine measurements, which formed a grid. All measurements were made in the fusion zone and were intragranular. Rockwell macrohardness measurements were made on the surface of the weld face and root. Weld face hardness was used during the data analysis since the face is typically more accessible during weld inspection.

Composition of the welds was measured for interstitial elements oxygen, nitrogen and carbon using the ASTM E-

Table 3 — Autogenous Weld Parameters

Thickness (in.)	Iron (wt-%)	Current (amps)	Voltage (volts)	Travel Speed in./min	Travel Speed mm/s	Cooling Rate (°C/s)
0.079 (2.0 mm) Heat 452141	0.07	70	8.0	3.5	1.48	11
0.079 (2.0 mm) Heat 452141	0.07	120	9.0	7.75	3.28	15
0.118 (3.0 mm) Heat 420053	0.03	200	10.0	7.75	3.28	10
		110	9.5	3.5	1.48	
0.125 Heat No. 455273	0.07	130	9.5	4.5	1.9	10
4-in. Sch. 10, 0.118t Heat No. R3562	0.11	116	9.2	4.0	1.7	10
2-in. Sch. 10, 0.105t Heat No. 879391	0.03	97	9.0	4.0	1.7	10
0.118 (3.0 mm)[a] Heat 420053	0.03	180	14.4	6.0	2.54	28

(a) These parameters were used in water-cooled copper fixture (high cooling rate tests).

1019 combustion method. Hydrogen was measured using the ASTM E-1447MOD combustion method. The iron content was measured on a number of samples from each heat using the ASTM E-1479 (ICPMS) method. An average iron content was calculated from these measurements and used as a constant during regression analysis. The heats used in these tests had iron levels of 0.03, 0.07 and 0.11 wt-%, as shown in Table 1.

Regression Analysis

Nonlinear programming in combination with regression analysis was used to develop OE equations that evaluated the effects of oxygen, nitrogen, carbon, iron and cooling rate on tensile strength, ductility and hardness. Three separate cases were analyzed as follows:

- An OE equation was developed to optimize the relationship between the factors (oxygen, nitrogen, carbon, hydrogen, iron and cooling rate) and the weld properties (strength, ductility and hardness).
- Individual OE equations were developed to optimize the relationships between the primary factors (oxygen, nitrogen, carbon and iron) and each weld property (strength, ductility and hardness).
- A single OE equation was developed to optimize the relationship between the primary factors (oxygen, nitrogen, carbon and iron) and weld properties.

Case 1 and Case 3 are the preferred conditions, assuming an efficient level of accuracy could be obtained with a single OE equation. A single equation supports the development of a predictive model and simplifies the correlation between properties. The objective of the regression analysis was to find the best relationships between mechanical properties and the OE. To reach this objective, regression analysis must find the best fit of OE coefficients and minimize the total error estimation. The approach was as follows:

Let A_i = chemical compositions of run i

C = chemical composition coefficients

z_i = OE of run i = $C \cdot A_i$, i = 1, ..., n

x_{ij} = design matrix, i = 1,..., n, j = 1,..., p-1

$X = [1\ Z\ Z^2]$

y_{ik} = mechanical property (response) k from run i = 1,..., n, k = 1,..., m

The following model was used:

$Y_k = X B_k + \varepsilon_k$, k = 1,..., m

where B_k was the regression coefficient.

The error term ε in the model was assumed to have $E(\varepsilon) = 0$ and $V(\varepsilon) = \sigma^2$, and the $\{\varepsilon_i\}$ were uncorrelated random variables.

Let L represent the sum of the squared errors, ε_{ik}, $y_{ik} - \hat{y}_{ik}$, where $\hat{y}_{ik}$ was the estimated y_{ik}.

$\varepsilon_{ik} = y_{ik} - \hat{y}_{ik}$, i = 1,..., n, k = 1,..., m,

$$L = \sum_{k=1}^{m} \sum_{i=1}^{n} \varepsilon_{ik}^2$$

The least squares method was taking the partial differential of L with respect to β_{jk}, j = 0, 1, 2, k = 1,..., m, and set it to zero. The coefficient β_{jk}, which minimizes the sum of the squared errors, was derived by solving the equations called least square normal equations.

$$\left.\frac{\partial L}{\partial B}\right|_{\hat{B}_k} = 0$$

Solving the normal equations above derived the regression coefficients $\hat{B}_k$. The estimated y_{ik} or the fitted regression model was $\hat{Y}_k = X\hat{B}_k$.

Further, the residual sum of squares (SS_E), the regression sum of squares (SS_R) and the total sum of squares (SS_T) were estimated to identify the coefficient of multiple determination R^2 and the adjusted R^2 for each relationship of X and Y_k. The definition (Ref. 8) of SS_E, SS_R, SS_T, R^2 and R^2_{adj} is the following:

$$SS_{E,k} = Y_k' Y_k - \hat{B}_k' X' Y_k$$

$$SS_{R,k} = \hat{B}_k' X' Y_k - \frac{\left(\sum_{i=1}^{n} y_{ik}\right)^2}{n}$$

$$SS_{T,k} = Y_k' Y_k - \frac{\left(\sum_{i=1}^{n} y_{ik}\right)^2}{n}$$

$$R_k^2 = \frac{SS_{R,k}}{SS_{T,k}} = 1 - \frac{SS_{E,k}}{SS_{T,k}}$$

$$R_{adj,k}^2 = 1 - \frac{SS_{E,k}/(n-p)}{SS_{T,k}/(n-1)} = 1 - \left(\frac{n-1}{n-p}\right)\left(1 - R^2\right)$$

The chemical coefficient matrix C was estimated such that it gave the least

squared error fit to each of the regression coefficients $\bar{B}_k$. Nonlinear programming was used to maximize the total $R^2_{adj,k}$, indicating how good the fits were considering the number of variables and the number of runs (n) in each Y_k. The formulation of the nonlinear program was as follows:

$$\underset{c}{\text{Max}} \sum_{k=1}^{m} R^2_{adj,k} \text{ Subject to } c_3 = 1$$

The only constraint was set to prevent multiple sets of solutions that would give the same solution or performance in fitting the regression model. Besides, it was more conventional to let other Cs vary as the proportion of oxygen coefficient while keeping the oxygen coefficient to the value of one. The fundamental basis of assuming oxygen coefficient being equal to one was to follow the analysis by Ogden and Jaffee in which the oxygen coefficient was one. The OE equation is the representation of chemical compositions related to different mechanical properties of the weld. Standard errors of coefficients for the OE equations and the mechanical properties were calculated and are provided in Table 4.

For the separate OE case, Case 2, three different matrixes C were developed for each of the mechanical properties Yi, which were strength, ductility and hardness. Then, the same regression analysis and maximization programming procedures were performed for each property to derive the OE matrix C with the most fit for that property.

Results and Discussion

Data from the welds produced in this investigation were combined with prior data (Refs. 4, 5) (Table 5) to maximize the data available for the regression analysis. All the welds were full penetration with root and face widths of approximately 3/16 and ½ in. (7.94 and 12.7 mm), respectively. These welds typically had a concave weld face and a convex weld root surface, but some of the weld sections were nearly flat. This permitted removal of all-weld-metal tensile specimens that were tested in the as-welded condition. The surfaces of many of the test welds made with increased oxygen levels in the shielding gas were colored light straw to blue. The cooling rates of full-penetration welds made with no copper backing were 10°, 11° and 15°C/s. The high cooling rate tests made in a cooled copper fixture increased the cooling rate to 28.1°C/s on the 0.118-in. (3.18-mm) sheet material (Table 3). This provided a cooling rate range from 10 to 28.1°C/s to represent the range common in manual and mechanized GTAW of sheet or thin-wall pipe.

Data from 39 tests were used to analyze the effects of oxygen, nitrogen, carbon, hydrogen, iron and cooling rate on the weld metal mechanical properties. The ranges for each factor are summarized in Table 6. The composition ranges were 4–42 ppm hydrogen, 0.03–0.11 wt-% iron, 0.1–0.27 wt-% oxygen, 0.0044–0.098 wt-% nitrogen and 0.010–0.062 wt-% carbon. Strength and hardness increased and ductility decreased as the interstitial content increased. The property ranges were 52.7–77.45 ksi yield (363.4–534.0 MPa), 63–91.2 ksi ultimate (434.4–628.8 MPa), 9.2–31% elongation, 12–50% reduction in area, 167–259 Vickers and 78–97 Rockwell B. The regression analysis was limited to the ranges defined here and the ability to predict properties of heats with lower and higher alloy content is an area for future study.

Regression analysis was performed for three cases to determine the best OE algorithm for CP titanium welds. Case 1 developed a single equation to evaluate all the factors. Case 2 was reduced to the primary factors, based on the Case 1 analysis, and developed separate equations that produced the "best fit" for each mechanical property. Case 3 also was based on the Case 1 analysis and resulted in a single equation for the primary factors simplifying the OE relationship.

Case 1

This regression analysis used the results of the welding tests to relate the effects of oxygen, nitrogen, carbon, hydrogen, iron and weld cooling rate (O, N, C, H, Fe and CR) to weld properties. The single OE equation for Case 1, which relates the effects of these factors to strength, ductility and hardness, is as follows:

$$OE_{case1} = 0.000713CR + 0.538C - 8.95H + 2.32N + O + 0.377Fe$$

The graphs showing the relationship between this equation and individual weld mechanical properties are shown in Fig. 4. The OE for the welds in this study using this equation ranges from 0.17 to 0.35 wt-%. The cooling rate factor was based on the data from Heats 420053 and 45241, where the cooling rate ranged from 10 to 28°C/s and 10 to 15°C/s, respectively. Cooling rate has the smallest coefficient in this equation. As this equation shows, the maximum change in OE due to cooling rate variation was (18 x 0.000713, which equaled 0.0128 wt-%) between 6 and 7%. Cooling rate was eliminated from the analysis in Case 2 and Case 3 based on this calculation and the fact the range of cooling rates produced by full-penetration GTAW is small. A goal of this project was to simplify the OE, if possible. It is believed welds made with higher cooling rate processes, like laser and electron beam, will show larger property changes since the cooling rate changes can be more than an order of magnitude.

The factors developed for OE_{case1} show hydrogen has the largest coefficient (–8.95), followed by nitrogen, oxygen, carbon and iron. Hydrogen has the only negative coefficient, indicating that hydrogen reduced strength and increased ductility over the range investigated. However, in this study, hydrogen was found to have a small effect on properties over the range evaluated due to the low concentration. Hydrogen ranged from 4–42 ppm (0.0004–0.0042 wt-%) producing a maximum change in OE of 340 ppm (0.034 wt-%). Hydrogen has been reported not to influence strength and ductility at low concentrations (Ref. 1). At higher concentrations, hydrogen can precipitate hydrides. These hydrides have been shown not to affect strength, ductility or hardness but significantly reduce toughness. Hydrogen was eliminated from the analysis in Case 2 and Case 3 since most heats of CP titanium have very low levels of hydrogen. Hydrogen should be minimized in production welding by proper base material cleaning and control of shielding gas dew point.

The OE coefficient for nitrogen in the Case 1 analysis was 2.32 and produced a net change in OE of 0.2172 wt-% over the nitrogen range. This was the largest net change of all the factors. The coefficient for carbon was 0.538, producing a net change in OE of 0.027 wt-% over the full range. The OE coefficient for iron was 0.377 producing a net change of 0.029 wt-% over the range. The effect of iron, although smaller than hydrogen, was included in Case 2 and 3 analysis since it is a solid-solution strengthener and counteracts the effects of hydrogen, which has low solubility. Case 2 showed the iron factor was more significant when hydrogen was not considered in the analysis.

The coefficients of multiple determination, R^2, were calculated for each quadratic equation based on the curves shown in Fig. 4. These equations can be used with the OE to approximate the weld properties of a given heat of CP titanium. The graphs may also be used to relate weld properties like hardness to ductility and permit assessment of titanium weld properties nondestructively. The R^2 values for each quadratic equation that related the OE to that property were summarized in

Table 4 — Standard Errors of Coefficients of OE Equations for Cases 1, 2 and 3

OE	Mechanical Properties	Term	Coefficient	Standard Error of Coefficient	T	P
Case 1		Constant	29.1	10.57	2.75	0.009
	Average UTS	OE	247.5	82.49	3.001	0.005
		OE^2	−235.9	157.19	−1.501	0.142
		Constant	23.7	8.595	2.76	0.009
	Average YS	OE	195	67.07	2.908	0.006
		OE^2	−139.3	127.825	−1.09	0.283
		Constant	81.6	11.75	6.94	0.000
	Average %E	OE	−401.7	91.73	−4.38	0.000
		OE^2	594.1	174.81	3.399	0.002
		Constant	103.9	22.58	4.6	0.000
	Average %ROA	OE	−435.7	176.19	−2.473	0.018
		OE^2	552.4	335.77	1.645	0.109
		Constant	13	38.4	0.34	0.735
	Average VHN	OE	1152	299.69	3.843	0.000
		OE^2	−1423	571.13	−2.491	0.017
		Constant	36.3	6.767	5.36	0.000
	Average Rb	OE	326.7	52.81	6.188	0.000
		OE^2	−454.8	100.632	−4.519	0.000
Case 2		Constant	41.8	7.298	5.725	0.000
	Average UTS	OE	169.2	59.122	2.861	0.007
		OE^2	−115.5	116.314	−0.993	0.327
		Constant	32.58	6.335	5.143	0.000
	Average YS	OE	146.70	51.320	2.858	0.007
		OE^2	−76.730	100.965	−0.760	0.452
		Constant	44.8	3.583	12.505	0.000
	Average %E	OE	−71.82	12.863	−5.583	0.000
		OE^2	40.96	10.663	3.842	0.000
		Constant	67.6	6.265	10.785	0.000
	Average %ROA	OE	−100.4	22.492	−4.462	0.000
		OE^2	52.2	18.646	2.798	0.008
		Constant	−1	29.12	−0.04	0.969
	Average VHN	OE	1202	218.26	5.508	0.000
		OE^2	−1473	400.77	−3.674	0.001
		Constant	37.4	5.801	6.447	0.000
	Average Rb	OE	302.7	43.484	6.96	0.000
		OE^2	390.9	79.846	−4.896	0.000
Case 3		Constant	39	8.143	4.794	0.000
	Average UTS	OE	167	55.599	3.004	0.005
		OE^2	−130.7	91.796	−1.423	0.163
		Constant	31.85	6.891	4.622	0.000
	Average YS	OE	133.03	47.052	2.827	0.008
		OE^2	−76.64	77.684	−0.987	0.330
		Constant	64	8.239	7.772	0.000
	Average %E	OE	−242.8	56.254	−4.317	0.000
		OE^2	292.7	92.877	3.151	0.003
		Constant	81.4	15.46	5.267	0.000
	Average %ROA	OE	−244.2	105.54	−2.314	0.027
		OE^2	225.3	174.25	1.293	0.204
		Constant	47.7	20.83	2.288	0.027
	Average VHN	OE	835.1	133.24	6.268	0.000
		OE^2	−925.1	206.44	−4.481	0.000
		Constant	55.2	2.677	20.619	0.000
	Average Rb	OE	168.3	16.579	10.15	0.000
		OE^2	−171.4	24.661	−6.95	0.000

Table 7. The Case 2 algorithm had the best R^2 values of the three cases.

The quadratic equations used have shown better fit than that of Ogden and Jaffee for all mechanical properties tested except Vickers hardness. The average R^2 value for the Case 1 equation was 0.82. This was better than the average R^2 of 0.76 that was calculated in the prior investigation (Ref. 5) using the OE equation developed by Ogden and Jaffee. The largest improvements in R^2 were related to yield strength and tensile ductility but, in general, all the OE equations developed in this investigation improved the

Table 5 — Test Data

	ID Number	CR	%C	%H	%N	%O	%Fe	avg UTS	avg YS	avg %E	avg %ROA	avg VHN	avg Rb
	NDE-01flat	10	0.0113	0.0013	0.0085	0.157	0.03						82.00
	NDE-02flat	10	0.0146	0.0017	0.0301	0.167	0.03						87.70
420053	NDE-03flat	10	0.0110	0.0012	0.0657	0.181	0.03						92.80
	NDE-04flat	10	0.0.185	0.0014	0.0970	0.186	0.03						97.70
	NDE-05flat	10	0.0256	0.0015	0.0071	0.218	0.03						88.30
	NDE-06flat	10	0.0535	0.0015	0.0057	0.268	0.03						97.50
	NDE-01(2")	10	0.0149	0.0009	0.0047	0.144	0.033						78.00
	NDE-02(2")	10	0.0167	0.0012	0.0130	0.152	0.033						86.00
879391	NDE-03(2")	10	0.0117	0.0011	0.0257	0.162	0.033						88.90
	NDE-04(2")	10	0.0137	0.0011	0.0360	0.180	0.033						92.90
	NDE-051(2")	10	0.0224	0.0010	0.0053	0.170	0.033						84.80
	NDE-06(2")	10	0.0436	0.0007	0.0118	0.231	0.033						92.00
	NDE-01(4")	10	0.0158	0.0026	0.0090	0.140	0.11						81.90
	NDE-02(4")	10	0.0284	0.0023	0.0158	0.137	0.11						89.00
R3562	NDE-03(4")	10	0.0258	0.0021	0.0285	0.138	0.11						92.10
	NDE-04(4")	10	0.0245	0.0031	0.0510	0.171	0.11						95.60
	NDE-0514")	10	0.0354	0.0022	0.0100	0.162	0.11						90.20
	NDE-06(4")	10	0.0590	0.0022	0.0157	0.226	0.11						94.80
	CP08HP	11	0.0205	0.0010	0.0140	0.115	0.07					179.50	79.83
	CP0821	11	0.0205	0.0012	0.0280	0.120	0.07					180.83	85.25
452141	CP0843	11	0.0230	0.0011	0.0365	0.120	0.07					194.67	88.33
	CP0860	11	0.0185	0.0015	0.0555	0.110	0.07					203.83	92.17
	CP0879	11	0.0170	0.0009	0.0625	0.125	0.07					221.17	94.50
	CP0897	11	0.0195	0.0009	0.0980	0.145	0.07					222.33	95.67
	CP08HP	15	0.0190	0.0010	0.0088	0.108	0.07	63.00	52.67	31.23	42.97	167.56	79.42
	CP0821	15	0.0213	0.0010	0.0200	0.116	0.07	68.00	57.67	19.00	32.70	179.44	84.50
452141	CP0843	15	0.0200	0.0006	0.0350	0.117	0.07	73.00	64.00	15.97	22.63	195.78	87.08
	CP0860	15	0.0175	0.0009	0.0460	0.119	0.07	76.00	67.00	12.10	21.70	206.11	90.08
	CP0879	15	0.0180	0.0008	0.0617	0.132	0.07	79.67	71.00	10.90	11.87	227.11	92.58
	CP0897	15	0.0207	0.0008	0.0620	0.140	0.07	81.00	72.57	9.27	19.30	220.11	93.00
	CP18HP	10	0.0105	0.0019	0.0074	0.157	0.03	66.33	55.67	29.00	42.20	172.22	79.67
	CP1821	10	0.0107	0.0015	0.0160	0.161	0.03	71.00	60.00	22.27	35.13	186.22	85.58
	CP1843	10	0.0147	0.0018	0.0237	0.169	0.03	75.00	63.67	16.63	24.73	201.89	85.54
	CP1860	10	0.0117	0.0017	0.0327	0.172	0.03	79.67	67.67	16.10	23.70	212.22	88.42
420053	CP1879	10	0.0100	0.0019	0.0555	0.170	0.03	81.00	68.00	10.67	18.63	224.33	92.33
	CP1897	10	0.0137	0.0017	0.0447	0.171	0.03	75.33	64.00	18.73	18.83	224.56	90.58
	CP1826	10	0.0180	0.0016	0.0068	0.180	0.03	72.50	59.50	24.70	37.95	191.11	83.42
	CP1852	10	0.0310	0.0012	0.0080	0.200	0.03	73.50	62.00	21.70	32.95	195.11	86.75
	CP1877	10	0.0320	0.0015	0.0080	0.200	0.03	78.50	65.00	18.00	27.90	211.89	91.08
	CP1810	10	0.0390	0.0004	0.0077	0.220	0.03	78.50	66.00	19.80	31.10	211.00	91.46
	CP18HP	28	0.0195	0.0015	0.0081	0.169	0.03	68.65	56.60	28.45	49.55	189.78	82.83
	CP1821	28	0.0159	0.0013	0.0169	0.163	0.03	73.70	61.05	20.00	34.30	205.40	88.58
	CP1843	28	0.0125	0.0014	0.0286	0.165	0.03	78.40	65.85	16.85	33.40	213.00	87.83
	CP1860	28	0.0149	0.0015	0.0430	0.178	0.03	84.40	71.45	16.95	24.20	232.78	92.17
420053	CP1879	28	0.0120	0.0012	0.0580	0.170	0.03	91.20	77.45	15.95	24.55	234.11	95.92
	CP1897	28	0.0130	0.0015	0.0630	0.180	0.03	87.15	75.55	14.95	22.10	232.56	93.50
	CP1826	28	0.0250	0.0016	0.0063	0.190	0.03	77.20	63.60	22.45	31.20	205.22	88.17
	CP1852	28	0.0330	0.0013	0.0044	0.210	0.03	80.70	66.70	19.65	26.90	216.80	92.00
	CP1877	28	0.0390	0.0014	0.0057	0.230	0.03	84.85	70.15	17.20	22.90	230.40	94.25
	CP1810	28	0.0590	0.0013	0.0065	0.270	0.03	88.40	73.35	15.00	18.70	242.80	96.08
	P400 (Air)	11	0.0270	0.0038	0.0099	0.140	0.11	68.05	54.70	24.15	45.10	193.00	81.90
	P421 (Air)	11	0.0250	0.0042	0.0190	0.150	0.11	72.00	59.05	21.50	42.60	207.00	89.00
	P443 (Air)	11	0.0240	0.0025	0.0270	0.150	0.11	75.05	62.75	17.80	34.35	217.00	91.00
	P460 (Air)	11	0.0290	0.0037	0.0350	0.160	0.11	79.55	67.10	16.05	24.20	237.00	93.70
R3562	P479 (Air)	11	0.0230	0.0034	0.0520	0.160	0.11	83.20	70.65	16.90	27.80	241.00	95.10
	P497 (Air)	11	0.0270	0.0027	0.0580	0.170	0.11	84.45	71.80	12.50	21.20	259.00	95.90
	P425 (CO_2)	11	0.0400	0.0029	0.0140	0.160	0.11	73.95	60.55	21.65	37.70	213.00	88.50
	P450 (CO_2)	11	0.0410	0.0032	0.0130	0.190	0.11	76.50	62.70	16.20	35.20	226.00	90.70
	P475 (CO_2)	11	0.0550	0.0029	0.0130	0.190	0.11	79.00	62.50	15.70	24.15	233.00	93.00
	P410 (CO_2)	11	0.0620	0.0029	0.0130	0.200	0.11	78.30	67.10	15.50	22.60	243.00	93.70
	W38	10	0.0220	0.0014	0.0290	0.120	0.07	71.85	58.50	25.00	35.45	190.00	86.50
455273	W40	10	0.0180	0.0016	0.0170	0.130	0.07	70.25	57.15	25.45	40.45	188.00	84.20
	W41	10	0.0180	0.0013	0.0096	0.130	0.07	66.05	52.95	29.85	38.15	180.00	80.90

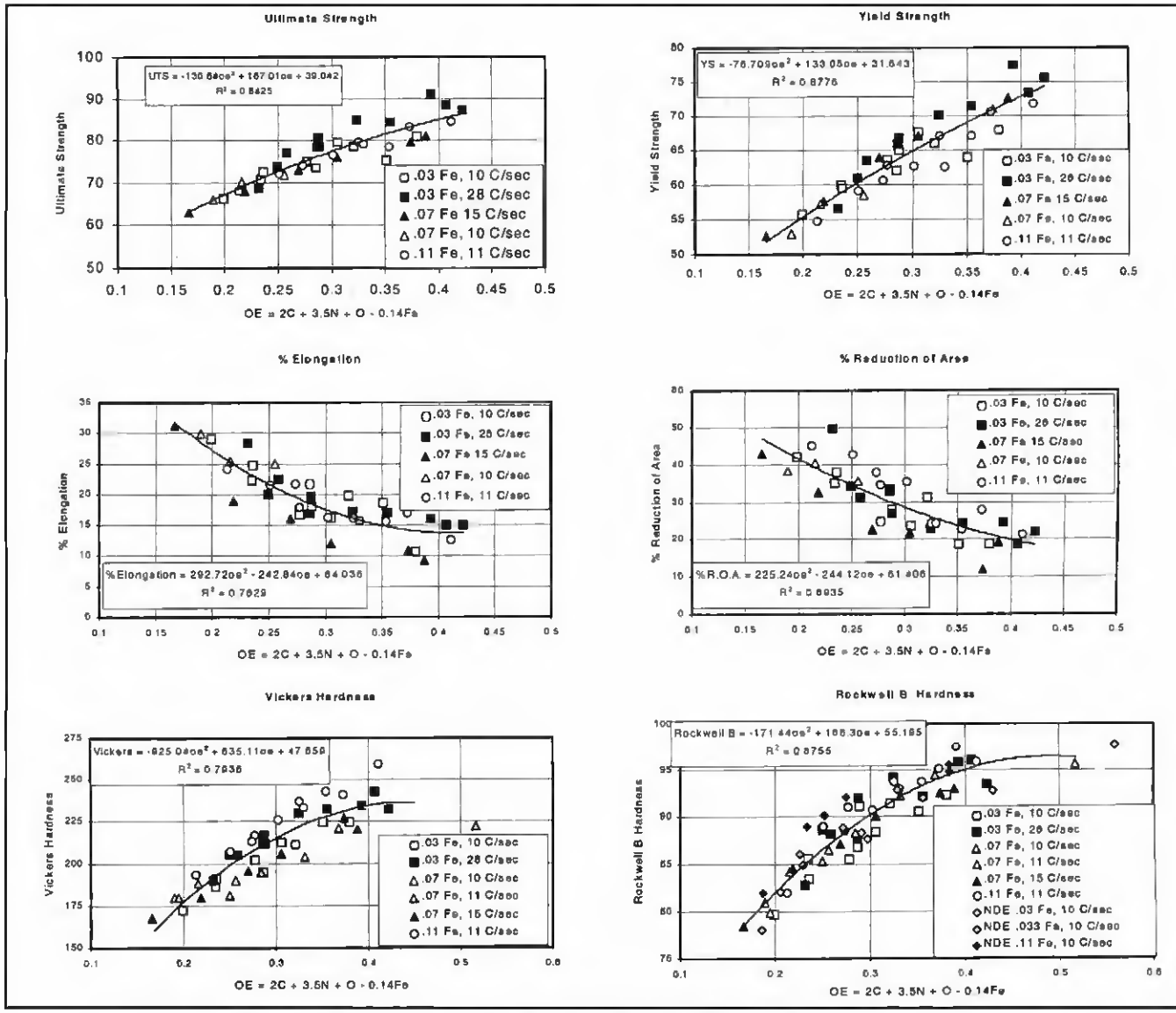

Fig. 6 — OE relationships for Case 3; primary factors, general equation for all properties.

OE relationship between weld metal properties and the controlling factors.

Case 2

The effects of O, N, C and Fe were related to strength, ductility and hardness in the Case 2 analysis. As stated above, cooling rate and hydrogen were dropped from this analysis due to their small influence on weld properties. Separate OE equations were calculated for each property as follows:

$$OE_{strength} = 1.12C + 2.69N + O - 0.21Fe$$
$$OE_{ductility} = 7.84C + 11.44N + O - 1.58Fe$$
$$OE_{hardness} = 0.97C + 2N + O - 0.37Fe$$

Graphs showing these equations plotted against mechanical properties are included in Fig. 5. Notice that the R^2 differences (Table 6) between Case 2 and Case 3 are minimal and not statistically significant, since both models fit the data nearly equally well. Therefore, the conclusion supported by Case 2 will be covered in Case 3 analysis.

Case 3

In this case, to simplify the relationships, the effects of O, N, C and Fe were related to strength, ductility and hardness using a single equation. As in Case 2, the effects of cooling rate and hydrogen were not included because of their small influence on weld properties. A general OE equation was calculated as follows:

$$OE_{case3} = 2C + 3.5N + O - 0.14Fe$$

Figure 6 shows how this equation relates to each of the mechanical properties measured for CP titanium. This equation yields a range of OE between 0.17 and 0.42 wt-% for the test data. The coefficients for carbon and nitrogen increased and the coefficient for iron decreased relative to Case 1. Compared to Case 1, the coefficients changed as follows:

- Carbon increased from 0.538 to 2
- Nitrogen increased from 2.32 to 3.5
- Iron decreased from 0.377 to 0.14.

The R^2 values for the Case 3 equation and each property shown in Fig. 6 are not as high as those for the equation developed in Case 1, but the differences are small (Table 7). Reduction of area has the poorest relationship to this OE, with an R^2 value of only 0.69. Equations for Rockwell B and strength have good relationships to the OE and have R^2 values that are greater than 0.84. For Rockwell B

Table 6 — Ranges of Chemical Composition and Mechanical Properties Defined by Regression Analysis

	Chemical Composition					
	%C	%N	%O	%Fe	%H	Cooling Rate
Minimum	0.0100	0.0044	0.1075	0.03	0.0004	10
Maximum	0.0620	0.0980	0.2700	0.11	0.0042	28
	Mechanical Properties					
	UTS	YS	% Elongation	%ROA	VHN	RB
Minimum	63.00	52.67	9.27	11.87	167.56	78.00
Maximum	91.20	77.45	31.23	49.55	259.00	97.70

Table 7 — R^2 Comparison of OE Equations for Cases 1, 2 and 3 and for RB Hardness

	Ogden/Jaffe	Case 1 All Factors General OE	Case 2 Primary Factors Separate OE's	Case 3 Primary Factors General OE	Rockwell 8 Hardness
Yield Strength	0.7842	0.8684	0.8957	0.8776	0.8004
Ultimate Strength	0.8751	0.9059	0.8725	0.8425	0.8527
Elongation	0.5722	0.7610	0.7937	0.7629	0.7058
ROA	0.6081	0.6762	0.7683	0.6935	—
Rockwell B	0.8404	0.8970	0.9027	0.8755	—
Vickers	0.8817	0.8135	0.8798	0.7938	—
Average R^2	0.7602	0.8203	0.8521	0.8076	0.786

Table 8 — Coefficients of OE Equations for Two and Three Variables

OE Equations	Average R^2 (OE-Mechanical Relationship)
3 Variables OE Equations Reducing from Case 3	
OE = 1.08N – 1.67C + 0.23Fe 55.60%	
OE = O–1.55C + 0.52Fe 28.64%	
OE = O + 2.19N +0.24Fe 78.48%	
OE = O + 3.12N + 1.45C	80.68%
2 Variables OE Equations Reducing from Ogden and Jaffe	
OE = O + 2C	17.08%
OE = O + 2.42N	76.22%
OE = 1.95N + 2C	61.65%

hardness, the difference in R^2 is only 0.016 between Case 1 and Case 3. The Case 1 and Case 3 OE equations produced good correlation with properties. A slightly better correlation would be obtained using the Case 1 equation, which requires cooling rate data to predict weld properties.

It may be quite possible there could be many OE equations, which would have as much predictive power as the ones presented. In the presented data, however, it was not possible to calculate more terms due to the aliases of chemical compositions.

The proposed procedure has been applied to the same set of data with the terms used in the oxygen equivalent being reduced to 3 and then 2, respectively. Oxygen, nitrogen and carbon were eliminated from the equation one at a time. The resulting oxygen equivalents had a high sum of squared errors and R^2 of 55.60, 28.64 and 78.48%, respectively (Table 8). When the iron term of the Case 3 model was eliminated, the model consisted of only three basic elements, oxygen, nitrogen, and carbon and resulted in R^2 of 80.68%.

It may appear the OE equation of Ogden and Jaffee has similar predictive value of the OE with the same factors or the Case 3 OE. The plot of the data using their OE equation and their equation for Vickers hardness shows three different trend lines could be drawn for each level of Fe — Fig. 9. Their OE equation could only explain the new data with different iron contents with R^2 of 70.96%.

Weld Hardness as a Measure of Contamination

The direct relationship between hardness, strength and ductility also was evaluated without factoring OE effects. The data in this investigation was used to create graphs between hardness and ductility (Fig. 8) and hardness and strength (Fig. 9) to quantify these relationships. The relationship between hardness and ultimate strength was the best, $R^2 = 0.85$, and was almost as good as the OE equations in Case 1 through Case 3 (Table 6). The good relationship between hardness and ultimate strength was expected since hardness has been shown to be proportional to ultimate strength in most alloy systems (Ref. 9). The relationship between hardness and yield strength or ductility was poorer, with R^2 values approximately 10% lower than those in the OE equations (Table 7).

Rockwell B testing has been proposed as a nondestructive method to assess weld quality or contamination level. A number of portable hardness testers are commercially available that could be adapted to titanium weld surface inspection. The previous discussions show either the Case 1 or Case 3 equation could be used to correlate Rockwell B hardness to ductility and strength with reasonable accuracy.

In Table 5, base metal Heats R3562, 879391 and 42003 were used to validate the OE relationship for Rockwell B and evaluate several portable hardness testers

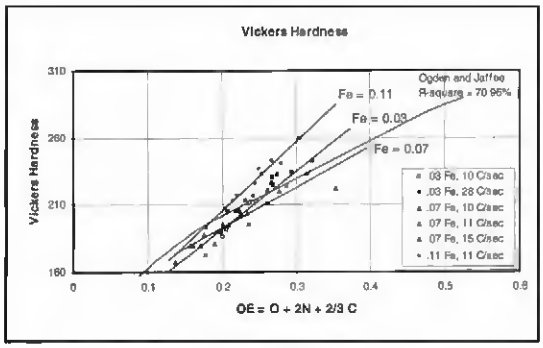

Fig. 7 — Vickers hardness data of CP titanium with different levels of iron using Ogden and Jaffee's OE, which does not include iron term (Ref. 1).

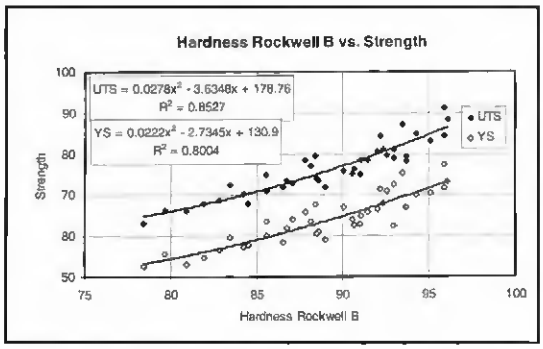

Fig. 8 — Relationship between Rockwell B and strength for CP titanium.

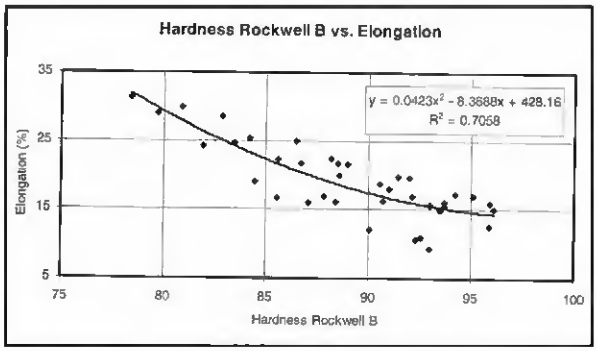

Fig. 9 — Relationship between Rockwell B and ductility for CP titanium.

(Ref. 10). The results of this experimentation showed hardness testing can be used to nondestructively inspect titanium welds for contamination if a maximum hardness is established for acceptance criteria. For example, if weld metal ductility must exceed 20% tensile elongation, then the weld hardness must be less than 88 Rockwell B, as shown in Figs. 4 and 6. This would be one method for using this OE database.

The accuracy of the OE equators is reasonable considering the anisotropic behavior of titanium. The results of this work show that OE formulas can be used to quantify the effects of oxygen, carbon, nitrogen, iron, hydrogen and cooling rate, which are the factors that control the strength of GTA welds in CP Grade 2 titanium. OE equations not only link the factors that control strength but can also be used to determine a level of interstitial equivalent pickup during welding. Based on the R^2 values of the quadratic equations used to fit the OE data, the characteristic curves developed in Case 1 or Case 3 provided reasonable correlation between weld metal properties. A more accurate prediction of each property for an individual heat of material can be calculated using Case 2 OE relationships. Future work on OE formulas should be performed on other titanium alloys, especially those that have a single-phase matrix where interstitial alloy content has a significant effect on weld properties. This would include other alpha alloys, like the palladium-strengthened grades, and near-alpha alloys.

Conclusions

1) OE equations can be used to relate the effects of alloy content and cooling rate to the properties of CP titanium weld metal.

2) The effect of cooling rate on OE is small and can probably be ignored for most GTAW single-pass welding applications.

3) The effect of hydrogen on the OE can probably be ignored based on prior art and its low concentration in CP Grade 2 titanium.

4) A series of Case 2 analyses generated separate OE equations that relate the effects of oxygen, nitrogen, carbon and iron to each individual weld property. These equations did not make significant improvements in the correlation coefficients compared to a single equation.

Acknowledgments

This report was prepared by Edison Welding Institute as an account of work under contract to the Navy Joining Center of Excellence. Funding for this work was provided by the United States Navy's Manufacturing Technology (MANTECH) Program under contract N00140-96-C-0188.

In addition, former student interns Greg Roderfeld, Carlos Gamino, Ana Espinoza and Steve Lipowski are acknowledged for producing the high cooling rate tests.

Legal Notice

The United States Government, Navy Joining Center and Edison Welding Institute make no warranties and assume no legal liability or responsibility for the accuracy, completeness or usefulness of the information disclosed in this report. Reference to commercial products, processes or services does not constitute or imply endorsement or recommendation.

References

1. Lenning, G. A., Craighead, C. M., and Jaffee, R. I. 1954. Constitution and mechanical properties of titanium-hydrogen alloys. AIME, *Journal of Metals*, Vol. 200.

2. Gould, J. E., Becker, D., and Williams, J. C. 1980. Microstructural characterization of Ti weldments. *Proceedings of Physical Metallurgy of Metal Joining*. AIME Fall Meeting, St. Louis, Mo.

3. Ogden, H. R., and Jaffee, R. L. 1995. The effects of carbon, oxygen and nitrogen on the mechanical properties of titanium and titanium alloys. TML Report No. 20. Battelle Memorial Institute.

4. Harwig, D. D., Fountain, C. M., and Castner, H. 1998. Oxygen equivalent effects on the mechanical properties of Ti and Ti-6Al-4V welds. EWI CRP Report MR9811.

5. Harwig, D. D., Fountain, C., Ittiwattana, W., and Castner, H. 2000. Oxygen equivalent effects on the mechanical properties of titanium welds. *Welding Journal* 79(11): 305-s.

6. Watkins, A. D., and Kunnerth, D. C. 1998. Prediction of titanium weld properties using eddy current nondestructive examination. *Trends in Welding Research*. Gatlingburg, Tenn.

7. Okazakij, K., and Conrad, H. 1973. Effect of grain size and interstitial solute content on the hardness of Ti-N, Ti-O and Ti-C alloys at room temperature. Transcript of *JIM*, Vol. 14.

8. Montgomery, D. C. 1996. *Design and Analysis of Experiments*, 4th ed. John Wiley and Sons, Inc.

9. Meyers, M. A., and Chawla, K. K. 1984. *Mechanical Metallurgy*. Prentice Hall, Inc.

10. Harwig, D.D., and Spencer, R. 1999. Evaluation of portable hardness testing for assessing titanium weld quality. Navy Joining Center Report 42029GDE-03